BRE BREIMER-ROTH TRANSFORMATOREN

COMPLETE PROGRAM 41

	Content	Page

	Content	Page

5 | POWER SUPPLIES

6 | ENCLOSURES AND ACCESSORIES

7 | ELECTRICAL ACCESSORIES

8 | OTHER

Welcome

to the world of transformers at Breimer-Roth Transformatorenwerke GmbH.

We are looking for a long term relationship with our customers, based on a reliable and fair cooperation so it becomes evident that we are the right partner to achieve your objectives.

To achieve this goal we strive for an open communication through all phases of our cooperation to combine your wants and needs with our product and service offerings.

Through sustainable added values we want to create economic conditions for our effectiveness in the future. This includes the continued development of energy efficient products.

Our strengths are solutions of customized task and custom made devices, which go far beyond our catalog.

In the following catalog pages we present our standard program.

For further information don't hesitate to contact us. We will assist your personally.

Wolfgang Orio
Dipl.-Betriebswirt
-CEO-
Master of business administration

You can find us here

- advises for power supply and voltage adjustment
- development and production of inductance
- development of energy efficient power supplies
- effective and innovative solutions from singe pieces up to series
- participation in the early stages of concept development
- analysis of the relevant parameters and creation of functional specifications
- mechanical designs in 3D (Autodesk Inventor)
- electrical constructions (Eplan P8, Rale etc.)
- construction in consideration of commercial and technical requirements
- standard search and examination
- production of initial samples
- initial sample check with detailed reports
- presentation, monitoring at external testing laboratories
- development and adaption until series maturity
- creation of documents for the serial production
- maintenance and testing of transformers
- repair of transformers

Low-Voltage Directive

Directive 2006/95/EC of the European Parliament and Council of December 12th, 2006 to approximate the laws of the Member States concerning electrical equipment designed for use within certain voltage limits is – aside from the EMC Directive – the most important regulatory tool for the safety of electrically powered equipment. This directive will replace Directive 73/23/EEC which was effective until January 15th, 2007.

EMC Directive

The EMC Directive or rather Directive 2004/108/EC refers to a regulation of the European Community entitled Electromagnetic Compatibility (of electrical and electronic products).It replaces the provisions of the „old" Directive 89/336/EEC. In general, the purpose of the EMC Directive is to ensure the interference free operation of electrical equipment and devices of all kind.

IEC Standards

Winding material will be manufactured and tested in line with European standard
EN61558 – safety of transformers, inductors, power supplies, etc.
Part 1: General requirements and tests
Part 2: Special demands on transformers and inductors

Directive 2002/95/EC of the European Parliament and Council

Dated January 27th 2003 restricting the use of certain hazardous substances
in electric and electronic equipment. All products of Breimer-Roth Transformatorenwerk GmbH are RoHS-compliant.

Directive 2011/65/EU of the European Parliament of Council

Dated June 8, 2011 restricting the use of certain hazardous substances in electric and electronic equipment (revision).
All products of Breimer-Roth Transformatorenwerk GmbH are RoHS-compliant.

European REACH Regulation

REACH is a regulation of the European Union adopted in order to improve the protection of people and the environment from the risks of exposure to chemicals while simultaneously increasing the competitiveness of the chemical industry in Europe. In addition, it encourages the development of alternative methods to assess harmful effect of chemical substances in order to reduce the number of experiments on animals. Products of Breimer Roth Transformatorenbau GmbH do not contain any quantity of SVHC substances subject to declaration. All products fulfill the provisions of this regulations.

ISO 9001 : 2008

Breimer Roth Transformatorenbau GmbH is certified under ISO 9001:2008.
Certification is periodically conducted by the VDE Institute.
Design and production of and trade with transformers, inductors and electronic components.

UL File and Isolation System Class F

Confirmed by our certification it will be easier and safer for you to enter the market. At the same time, you will cut cost in the handling of the system approval process. Our winding material is certified to the standards UL 5085/CSA 22.
For more information, see our separate UL product catalog.

Control transformers DIN EN 61558-2-2

The control transformer is a separated transformer and intended for supplying auxiliary power circuits DIN VDE 0570 part 2-2. The input winding is separated from the output winding by at least basic insulation. Control transformers have a small voltage drop with an inductive load. In accordance with DIN VDE 0113 part 1,a control transformer must be provided for electrical systems if the installations or system have more than 5 electromagnetic actuation coils, relays or sim. or control and signal devices are fitted outside the control cabinets and machines and when electronic control or signal circuits are to be supplied.

Scope:
rated supply voltage: ≤ 1100 V
rated frequency: ≤ 500 Hz
maximum power for single-phase transformers: 25KVA
maximum power for three-phase transformers: 40KVA

Isolating transformer EN 61558-2-4

The isolating transformer is a transformer with protective separation between the input and output windings. Isolating transformers are used for electrical separation of power circuits, in order to limit dangers, which can result from unintentional simultaneous contact of the earth and parts under voltage or metal parts, which could be under voltage, when there is a fault. The protective measure “protective insulation” can be fulfilled by isolating transformers.

Scope:
Input voltage: ≤ 1100 V
Output voltage: ≤ 1100 V
Frequency: ≤ 500 Hz

Safety isolating transformer EN 61558-2-6

A safety isolating transformer is an isolating transformer for supplying SELV- or PELV- circuits. Safety transformers are designed to supply a device or distributor power circuit in order to prevent impermissibly high or possibly dangerous contact The protective measure “low safety voltage” can be fulfilled by safety isolating transformers.

Scope:
Input voltage : ≤ 1100 V
Output voltage : ≤ 50VAC oder ≤ 120VDC
Frequency: ≤ 500 Hz
Maximum power for single-phase transformers: 10 KVA
Maximum power for three-phase transformers: 16 KVA

Isolating transformer for the supply of medical rooms EN 61558-2-15

An isolating transformer for the supply of medical rooms with double or reinforced insulation between each part of the transformer except between the core and the body and screening between two windings. Single-phase transformers have a midpoint for monitoring equipment of the secondary winding. The lead out of the midpoint shall be connected to a separate terminal. The transformers are used in electrical installations in hospitals and locations for medical use outside hospitals in IT systems. Shutdown due to overloading is not permissible with these transformers. A monitoring device should be provided for checking the load (temperature or current).

Scope:
Inrush current: 12-fach I_N
Idling-input current: max 3% von I_N
Impedance voltage u_k: max 3%
Power: 3,15 – 8 kVA

Toroidal variable transformer EN 61558-2-14

Toroidal variable transformers are used, if the fine adjustment of alternating voltage from zero up to the maximum value is required.

Auto transformer EN 61558-2-13

An auto transformer is a transformer in which input and output windings have common parts. There is no galvanical separation. A distinction is made between core power and rated power. The core power can be calculated from the transformation ratio and the rated power with the aid of the table A significant saving of materials is achieved with one-coil winding because the core power is smaller than the rated power.

Calculation formluar:

Typepower = 1- (undervoltage/overvoltage) * nominal capacity

Please note our advice for the use of three-phase auto transformers on page 40!

Reactors EN 61558-2-20

Reactors are resistances with a high inductive and low ohmic fraction. They find following applications

cine reactors:	for limiting the short-circuit current to a predefined value.
smoothing reactor:	for reducing the ripple factor with pulse-form direct voltages.
commutation reactors:	in system with controlled semi-conductors for limiting the commutation current.
filter circuit reactors:	in compensation systems for protecting the capacitors from impermissible harmonic waves

Insulating classes and temperature limits

The insulation classes divide insulating materials according to temperature ranges, for which they are capable. The insulation materials will lose effect by the lasting heat loss of the transformer. This chemical aging process is getting faster with increasing temperature. Therefore insulating and impregnating mediums have to be chosen in the corresponding class, to reach a sufficient lifetime of the insulation. More information about the insulation classes can be taken from EN60085. We manufacture on request in all insulation classes.

Insulating class	RTE*	Thermal class
Y	≥ 90° but < 105°	90°C
A	≥ 105° but < 120°	105°C
E	≥ 120° but < 130°	120°C
B	≥ 130° but < 155°	130°C
F	≥ 155° but < 190°	155°C
H	≥ 190° but < 200°	180°C

* Relative thermal stability index.

Ambient temperature

The rated ambient temperature is the maximum temperature at which the transformer may be operated continuously under normal conditions of use. The power output values stated in our catalogue hold for ambient temperature of 40°C Transformers with cooling channels must be standing. Ventilation must be free of obstruction. For ambient temperatures higher than 40°C, the power must be reduced according to the following table.

Ambient temperature	45°C	50°C	55°C	60°C
Nominal rating as % of unit rating	95%	85%	80%	75%

Installation at altitudes (> 1000m NN)

The transformer, reactors and power supply units are designed for installation up to 1000 m above sea level. When installed at sites higher than 1000 m, the loading must be reduced The values for a rating are stated in the following table.

Installation at altitudes m	1000m	1500m	2000m	3000m	4000m
Power reducing factor	100%	97%	94%	90%	85%

Protection class

Transformers are classified according to their protection against electric shock.

Class I transformer is a transformer in which protection against electric shock does not rely on basic insulation only, but which includes an additional safety precaution such as an earthing terminal.

Class II transformer is a transformer in which protection against electric shock does not rely on basic insulation only, but in which additional safety precautions such as double insulation or reinforced insulation are provided, there being no provision for protective earthing or reliance upon installation conditions.

Class III transformer is a transformer in which protection against electric shock relies on supply at SELV and in which voltages higher than those of SELV are not generated.

Short term load and duty cycle

The nominal rating specification in the catalogue relate to the operating mode Continuous Operation (CO). In most cases with shorter loading times, Intermittent Operation (IO), a transformer The time of operation for transformers is the relationship between load time and duty cycle time. The duty cycle time is limited to 10 minutes.

The time of operation in % can be calculated with the following formula:

$$ED\ \% = \frac{\text{duty-cycle}}{(\text{Operating time} + \text{Duty cycle})} \times 100\%$$

The type power for short term load is calculated below:

$$\text{Type power} = \text{nominal capacity} \times \sqrt{\frac{ED\ \%}{100}}$$

We distinguish, according to standards, among the following operation modes:

S1 permanent operation, constant load
S2 short time operation, constant load
S3 continuous operation, start has no influence on temperature
S4 continuous operation, start has influence on temperature
S5 continuous operation, start and break has influence on temperature
S6 continuous operation with intermittent loading
S7 permanent operation
S8 permanent operation, load changes

Short term power

In control circuits with a predominant power demand by contactor and relay coils the interpretation of control transformer is based on the possible short -term exposure KB (tightening power of the coil) at a power factor (cos phi) of 0.5 and a voltage drop of more than 5 %.

Tap
Transformers can be executed on the input and output side with taps. Taps on the input side, for example, serve as the adaptation and use of the transformer at different mains voltages.

Protection
Primary line protection (if required) interpret slow - rule of thumb 1.5 to 2 x rated current, secondary Always make sure to protect nominal current (Starting current of the appliance eg. consider motor)

Connections
0 - 50A of standard transformer terminals, 50 - 340A terminal blocks on head angle, from 340A cable lugs or copper bars. Different constructions possible, depending on manufacturing model.

Connected load
Information always as apparent power in VA o kVA at cos φ =1, otherwise active power in W o kW plus cos φ of the connected machine , calculation 1ph transformer.. P = U x I: cos φ , 3ph-transformer P = U x I x √3 : cos φ

Non-inherently short-circuit proof transformer
This is a transformer that includes a protective device. For example, a fuse, an overcurrent release or a temperature limiter, which opens the primary or secondary circuit , when the transformer is overloaded or short-circuited.

cos φ
Is determined by consumer, such as motor, contactor. At cos **φ** = 0,5 is the apparent power = 2 x active power), Pschein x cos φ = Pwirk

iron losses
Are core losses (unmagnetization losses) and also occur in the unloaded transformer during operation. They are dependent on the induction, power fluctuations (e.g. mains voltage +/- 10 %) and the frequency (eg 50Hz , 60Hz)

Inrush
Specifies the inrush current, which arise phase dependend at switch on. Transformers usually have an inrush between 8 and 20 times the rated current. However toroidals up to 80 times of the rated current. In consequence, high primary fuse values are required. Countermeasures can be: Inrush current limiter , constructive measures of transformer calculation.

Fail-Safe-Transformer
This is a transformer that fails through improper use, but is not dangerous for the user or the environment.

Frequency
Determines the induction and iron losses, each 50Hz transformer can be operated at 60Hz. But not vice versa!

Separated Winding
For transformers with separate windings there is no conductive connection between individual windings, they are galvanically isolated. The type power corresponds to the rated output power.

Low voltage
Voltages under 50 volt

Low voltage (low tension)
Voltages from 51 up to 1000 Volt

High voltage
Voltages above 1000 volt

Copper weight
At the same frame size, can give information on the winding losses and the associated efficiency.

Short-circuit voltage (u_k)
This is the voltage which has to be applied to the input winding, so that a short circuited output winding of the rated output current flows. It is expressed in % of the rated input voltage.

Short-circuit proof transformer
Transformer in which the temperature does not exceed the specified limits when the transformer is overloaded or short-circuit and which continues to meet all requirements of this standard after the removal of the overload or short-circuit.

Non-short-circuit proof transformer
A transformer which is intended to be protected against excessive temperature by means of a protective device not provided with the transformer and which continues to meet all the requirements of this standard after the removal of the overload or short-circuit and resetting of the protective device.

No-load output voltage (U_0)
The output voltage when the transformer is connected to rated supply voltage at rated frequency with no-load on the output.

No-load current (I_0)
The input current when the transformer is connected to rated supply voltage at rated frequency with no-load on the output.

Autowindings
Autowindings are conducting connection between primary and secondary windings. In addition, autowindings occurs a substantial material savings.

Vacuum impregnation
Protection against humidity and aggressive atmosphere. Bonds also the core sheets to each other and the windings with each other and with their isolation. Therefore, a strong noise reduction and better thermal coupling of the winding can be achieved.

Power losses of the transformer
The power losses of a transformer consists of iron losses (due to the induction and frequency) and copper losses (due to the current through the coil and its temperature) together. Iron losses are idling losses and therefore always present. It can be optimized through design and the type of core sheets. Copper losses are load-dependent, they are always specified at rated load or rated current and can be influenced by the quality of the winding and amount of the copper weight.

1 | SINGLE-PHASE TRANSFORMERS

Notes

Application form for customized single-phase transformers

Company _____

Street adress _____

Zip code, city _____

Contact person _____

Phone _____

Mail _____

Units _____

☐ Isolating transformer ☐ Safety transformer ☐ Auto transformer ☐ Control transformer

☐ Other _____

Power _____

Input voltage _____

Input current _____

Output voltage _____

Output current _____

Duty cycle ☐ S1 / 100% ED ☐ Others _____

Frequency ☐ 50/60 Hz ☐ 60 Hz ☐ Others _____

Temperature class ☐ ta 40°C/E ☐ ta 40°C/B ☐ ta 40°C/F ☐ Others _____

Protection class ☐ IP xx B (IP 00) ☐ IP 23 ☐ IP 54 ☐ Casting

☐ Others _____

Housing color ☐ RAL 7035 ☐ RAL 7032 ☐ Others _____

Standards ☐ EN 61558 ☐ UL/CSA ☐ Others _____

Primary connection ☐ Terminals ___mm² ☐ Solder lug ☐ Free ends ☐ Others _____

Secondary connection ☐ Terminals ___mm² ☐ Solder lug ☐ Free ends ☐ Others _____

Attachment ☐ Foot angle ☐ Foot bar ☐ Catch spring ☐ Studs

Documentation ☐ inspection record ☐ Data sheet ☐ Circuit diagram ☐ Serial numbers

Appointment _____

Others _____

General characteristics:

- control transformer with standard voltages
- energy efficient with grain oriented sheet (M165-35A)
- nested mutually
- high overload capability
- voltage adjustment through tappings on the input side +-5%
- open design for stationary installation
- back of hand and finger contact protected terminals, according to DGUV, Rule 3
- IP xx B, insulation class B, max ambient temperature ta 40°C (ta 40°C/B
- UL approval (UL5085 - XPTQ2) as standard)

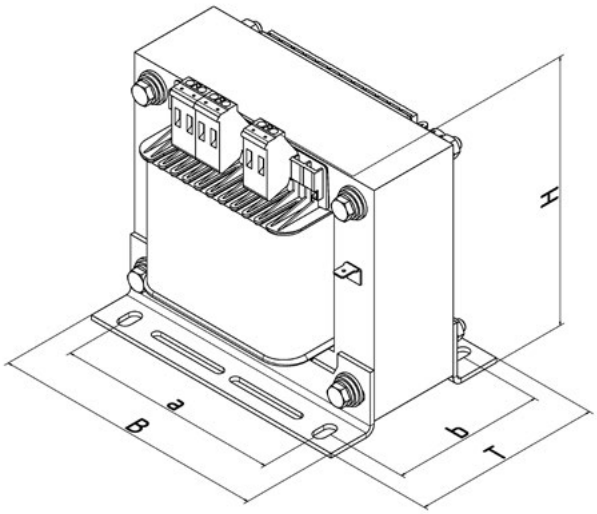

Standard voltages:

AC 220/230/240V // AC 24V (up to 1200VA)
AC 220/230/240V // AC 230V
AC 380/400/420V // AC 24V (up to 1200VA)
AC 380/400/420V // AC 230V
AC 440/460/480/500V // AC 24V (up to 1200VA)
AC 440/460/480/500V // AC 230V

Standards:

EN 61558-2-2	Control transformers
EN 61558-2-4	Isolation transformer
EN 61558-2-6	Safety transformer
UL 5085	Low voltage transfomers (XPTQ2)

Model	Power [VA]	230 // 24 V Art.-No.	230 // 230 V Art.-No.	400 // 24 V Art.-No.	400 // 230 V Art.-No.	500 // 24 V Art.-No.	500 // 230 V Art.-No.
BSV 50	50	0500-10-000050	0501-10-000050	0502-10-000050	0503-10-000050	0504-10-000050	0505-10-000050
BSV 63	63	0500-10-000063	0501-10-000063	0502-10-000063	0503-10-000063	0504-10-000063	0505-10-000063
BSV 80	80	0500-10-000080	0501-10-000080	0502-10-000080	0503-10-000080	0504-10-000080	0505-10-000080
BSV 100	100	0500-10-000100	0501-10-000100	0502-10-000100	0503-10-000100	0504-10-000100	0505-10-000100
BSV 160	160	0500-10-000160	0501-10-000160	0502-10-000160	0503-10-000160	0504-10-000160	0505-10-000160
BSV 200	200	0500-10-000200	0501-10-000200	0502-10-000200	0503-10-000200	0504-10-000200	0505-10-000200
BSV 250	250	0500-10-000250	0501-10-000250	0502-10-000250	0503-10-000250	0504-10-000250	0505-10-000250
BSV 320	320	0500-10-000320	0501-10-000320	0502-10-000320	0503-10-000320	0504-10-000320	0505-10-000320
BSV 400	400	0500-10-000400	0501-10-000400	0502-10-000400	0503-10-000400	0504-10-000400	0505-10-000400
BSV 450	450	0500-10-000450	0501-10-000450	0502-10-000450	0503-10-000450	0504-10-000450	0505-10-000450
BSV 500	500	0500-10-000500	0501-10-000500	0502-10-000500	0503-10-000500	0504-10-000500	0505-10-000500
BSV 570	570	0500-10-000570	0501-10-000570	0502-10-000570	0503-10-000570	0504-10-000570	0505-10-000570
BSV 630	630	0500-10-000630	0501-10-000630	0502-10-000630	0503-10-000630	0504-10-000630	0505-10-000630
BSV 700	700	0500-10-000700	0501-10-000700	0502-10-000700	0503-10-000700	0504-10-000700	0505-10-000700
BSV 720	720	0500-10-000720	0501-10-000720	0502-10-000720	0503-10-000720	0504-10-000720	0505-10-000720
BSV 800	800	0500-10-000800	0501-10-000800	0502-10-000800	0503-10-000800	0504-10-000800	0505-10-000800
BSV 1000	1000	0500-10-001000	0501-10-001000	0502-10-001000	0503-10-001000	0504-10-001000	0505-10-001000
BSV 1200	1200	0500-10-001200	0501-10-001200	0502-10-001200	0503-10-001200	0504-10-001200	0505-10-001200
BSV 1600	1600	---	0501-10-001600	---	0503-10-001600	---	0505-10-001600
BSV 1800	1800	---	0501-10-001800	---	0503-10-001800	---	0505-10-001800
BSV 2000	2000	---	0501-10-002000	---	0503-10-002000	---	0505-10-002000
BSV 2200	2200	---	0501-10-002200	---	0503-10-002200	---	0505-10-002200
BSV 2500	2500	---	0501-10-002500	---	0503-10-002500	---	0505-10-002500
BSV 3000	3000	---	0501-10-003000	---	0503-10-003000	---	0505-10-003000

Model	Size	Copper [kg]	Total [kg]	Dimensions [mm]					
				B	T	H	a	b	Screw
BSV 50	EI 66/36	0,20	0,98	66	80	80	50	54	M4
BSV 63	EI 78/27	0,27	1,20	78	71	89	56	45	M4
BSV 80	EI 78/36	0,29	1,48	78	80	89	56	54	M4
BSV 100	EI 84/43	0,37	1,68	85	82	93	64	61	M4
BSV 160	EI 84/52	0,47	2,30	85	90	93	64	69	M4
BSV 200	EI 96/45	0,63	2,95	96	88	104	84	70	M5
BSV 250	EI 96/59	0,73	3,80	96	102	104	84	84	M5
BSV 320	EI 105/60	0,93	4,70	105	104	110	84	85	M5
BSV 400	EI 120/53	1,25	5,40	120	100	120	90	82	M5
BSV 450	EI 120/61	1,30	6,20	120	108	120	90	90	M5
BSV 500	EI 120/73	1,46	7,30	120	120	120	90	102	M5
BSV 570	EI 135/52	1,76	6,60	135	105	131	104	86	M5
BSV 630	EI 135/62	1,75	7,00	135	115	131	104	96	M5
BSV 700	EI 135/72	1,90	8,00	135	125	131	104	106	M5
BSV 720	EI 150N/49	2,30	8,30	150	107	145	122	84	M6
BSV 800	EI 150N/66	2,60	10,1	150	124	145	122	101	M6
BSV 1000	EI 150N/92	2,80	13,0	150	150	145	122	127	M6
BSV 1200	EI 174/60	3,75	13,7	174	126	157	135	94	M6
BSV 1600	EI 174/74	4,30	15,7	174	140	157	135	10	M6
BSV 1800	EI 174/82	4,60	17,7	174	148	157	135	116	M6
BSV 2000	EI 174/102	4,90	22,0	174	168	157	135	136	M6
BSV 2200	EI 192/82	5,90	24,0	195	154	178	150	122	M8
BSV 2500	EI 192/104	6,00	24,6	195	176	178	150	144	M8
BSV 3000	EI 192/110	6,60	26,9	195	182	178	150	150	M8

General characteristics:

- control transformer with standard voltages
- cost optimized
- welded
- voltage adjustment through +- % 5 tappings on the input side
- open design for stationary installation
- back of hand and finger contact protected terminals, according to DGUV rule 3
- IP xx B, insulation class B, max ambient temperature 40°C (ta 40°C/B)
- 50-250 VA versions with combined mounting plate
- UL approval (UL5085 - XPTQ2) as standard

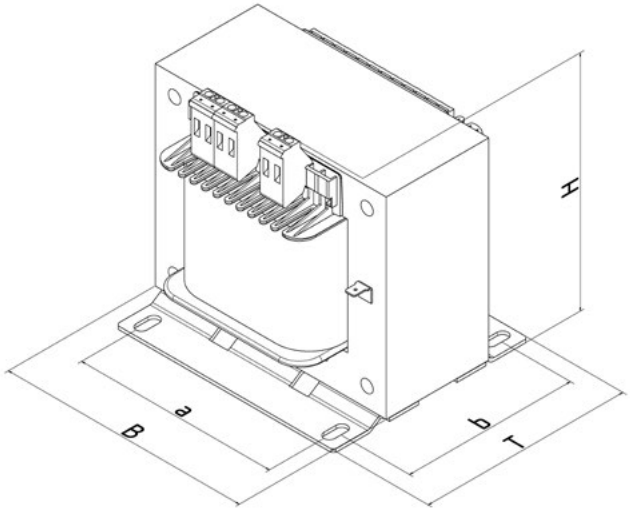

Standard voltages:

AC 220/230/240V // AC 24V (up to 1200VA)
AC 220/230/240V // AC 230V
AC 380/400/420V // AC 24V (up to 1200VA)
AC 380/400/420V // AC 230V
AC 440/460/480/500V // AC 24V (up to 1200VA)
AC 440/460/480/500V // AC 230V

Standards:

EN 61558-2-2	Control transformers
EN 61558-2-4	Isolation transformer
EN 61558-2-6	Safety transformer
UL 5085	Low voltage transfomers (XPTQ2)

Model	Power [VA]	230 // 24 V Art.-No.	230 // 230 V Art.-No.	400 // 24 V Art.-No.	400 // 230 V Art.-No.	500 // 24 V Art.-No.	500 // 230 V Art.-No.
BS 50	50	0510-10-000050	0511-10-000050	0512-10-000050	0513-10-000050	0514-10-000050	0515-10-000050
BS 63	63	0510-10-000063	0511-10-000063	0512-10-000063	0513-10-000063	0514-10-000063	0515-10-000063
BS 80	80	0510-10-000080	0511-10-000080	0512-10-000080	0513-10-000080	0514-10-000080	0515-10-000080
BS 100	100	0510-10-000100	0511-10-000100	0512-10-000100	0513-10-000100	0514-10-000100	0515-10-000100
BS 160	160	0510-10-000160	0511-10-000160	0512-10-000160	0513-10-000160	0514-10-000160	0515-10-000160
BS 200	200	0510-10-000200	0511-10-000200	0512-10-000200	0513-10-000200	0514-10-000200	0515-10-000200
BS 250	250	0510-10-000250	0511-10-000250	0512-10-000250	0513-10-000250	0514-10-000250	0515-10-000250
BS 320	320	0510-10-000320	0511-10-000320	0512-10-000320	0513-10-000320	0514-10-000320	0515-10-000320
BS 400	400	0510-10-000400	0511-10-000400	0512-10-000400	0513-10-000400	0514-10-000400	0515-10-000400
BS 450	450	0510-10-000450	0511-10-000450	0512-10-000450	0513-10-000450	0514-10-000450	0515-10-000450
BS 500	500	0510-10-000500	0511-10-000500	0512-10-000500	0513-10-000500	0514-10-000500	0515-10-000500
BS 570	570	0510-10-000570	0511-10-000570	0512-10-000570	0513-10-000570	0514-10-000570	0515-10-000570
BS 630	630	0510-10-000630	0511-10-000630	0512-10-000630	0513-10-000630	0514-10-000630	0515-10-000630
BS 700	700	0510-10-000700	0511-10-000700	0512-10-000700	0513-10-000700	0514-10-000700	0515-10-000700
BS 720	720	0510-10-000720	0511-10-000720	0512-10-000720	0513-10-000720	0514-10-000720	0515-10-000720
BS 800	800	0510-10-000800	0511-10-000800	0512-10-000800	0513-10-000800	0514-10-000800	0515-10-000800
BS 1000	1000	0510-10-001000	0511-10-001000	0512-10-001000	0513-10-001000	0514-10-001000	0515-10-001000
BS 1200	1200	0510-10-001200	0511-10-001200	0512-10-001200	0513-10-001200	0514-10-001200	0515-10-001200
BS 1600	1600	---	0511-10-001600	---	0513-10-001600	---	0515-10-001600
BS 1800	1800	---	0511-10-001800	---	0513-10-001800	---	0515-10-001800
BS 2000	2000	---	0511-10-002000	---	0513-10-002000	---	0515-10-002000
BS 2200	2200	---	0511-10-002200	---	0513-10-002200	---	0515-10-002200
BS 2500	2500	---	0511-10-002500	---	0513-10-002500	---	0515-10-002500
BS 3000	3000	---	0511-10-003000	---	0513-10-003000	---	0515-10-003000

Model	Size	Copper [kg]	Total [kg]	Dimensions [mm]					
				B	T	H	a	b	Screw
BS 50	EI 66/36	0,20	0,98	66	80	80	50	54	M4
BS 63	EI 78/27	0,27	1,20	78	71	89	56	45	M4
BS 80	EI 78/36	0,29	1,48	78	80	89	56	54	M4
BS 100	EI 84/43	0,37	1,68	85	82	93	64	61	M4
BS 160	EI 84/52	0,47	2,30	85	90	93	64	69	M4
BS 200	EI 96/45	0,63	2,95	96	88	104	84	70	M5
BS 250	EI 96/59	0,73	3,80	96	102	104	84	84	M5
BS 320	EI 105/60	0,93	4,70	105	104	110	84	85	M5
BS 400	EI 120/53	1,25	5,40	120	100	120	90	82	M5
BS 450	EI 120/61	1,30	6,20	120	108	120	90	90	M5
BS 500	EI 120/73	1,46	7,30	120	120	120	90	102	M5
BS 570	EI 135/52	1,76	6,60	135	105	131	104	86	M5
BS 630	EI 135/62	1,75	7,00	135	115	131	104	96	M5
BS 700	EI 135/72	1,90	8,00	135	125	131	104	106	M5
BS 720	EI 150N/49	2,30	8,30	150	107	145	122	84	M6
BS 800	EI 150N/66	2,60	10,1	150	124	145	122	101	M6
BS 1000	EI 150N/92	2,80	13,0	150	150	145	122	127	M6
BS 1200	EI 174/60	3,75	13,7	174	126	157	135	94	M6
BS 1600	EI 174/74	4,30	15,7	174	140	157	135	108	M6
BS 1800	EI 174/82	4,60	17,7	174	148	157	135	116	M6
BS 2000	EI 174/102	4,90	22,0	174	168	157	135	136	M6
BS 2200	EI 192/82	5,90	24,0	195	154	178	150	122	M8
BS 2500	EI 192/104	6,00	24,6	195	176	178	150	144	M8
BS 3000	EI 192/110	6,60	26,9	195	182	178	150	150	M8

General characteristics:

- transformer with customized voltages
- energy efficiency with grain oriented sheet
- nested mutually
- high overload capability
- open design for stationary installation
- back of hand and finger contact protected terminals, according to DGUV rule 3
- IP xx B, insulation class B, max ambient temperature 40°C (ta 40°C/B)
- available in several standards
- UL approval (UL5085 - XPTQ2) available on request

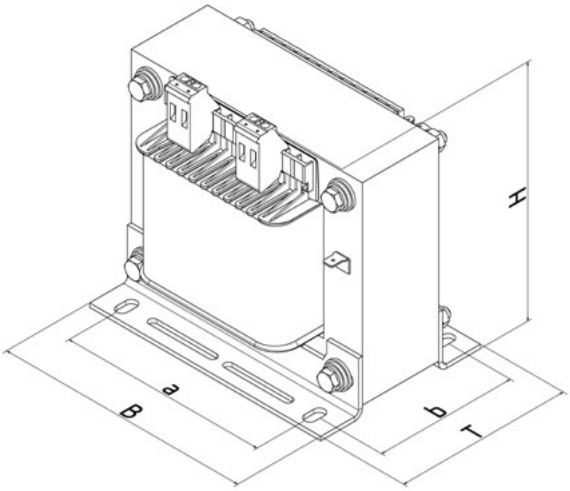

Standards:

EN 61558-2-2	Control transformers
EN 61558-2-4	Isolation transformer
EN 61558-2-6	Safety transformer
EN 61558-2-13	Auto transformers
UL 5085	Low voltage transfomers (XPTQ2)

Model	Art.-No.	Power [VA]	Size	Copper [kg]	Total [kg]	Dimensions [mm]					
						B	T	H	a	b	Screw
BEV 25	0520-20-xxxxxx	25	EI 60/21	0,13	0,50	60	65	76	44	36	M3
BEV 35	0520-20-xxxxxx	35	EI 60/31	0,14	0,52	60	75	76	44	46	M3
BEV 50	0520-20-xxxxxx	50	EI 66/36	0,20	0,98	66	80	80	50	54	M4
BEV 63	0520-20-xxxxxx	63	EI 78/27	0,27	1,20	78	71	89	56	45	M4
BEV 80	0520-20-xxxxxx	80	EI 78/36	0,29	1,48	78	80	89	56	54	M4
BEV 100	0520-20-xxxxxx	100	EI 84/43	0,37	1,68	85	68	93	64	47	M4
BEV 160	0520-20-xxxxxx	160	EI 84/52	0,47	2,30	85	90	93	64	69	M4
BEV 161	0520-20-xxxxxx	160	EI 96/35	0,57	2,38	96	78	104	84	60	M5
BEV 200	0520-20-xxxxxx	200	EI 96/45	0,63	2,95	96	88	104	84	70	M5
BEV 201	0520-20-xxxxxx	200	EI 105/37	0,71	3,20	105	80	110	84	62	M5
BEV 250	0520-20-xxxxxx	250	EI 96/59	0,73	3,80	96	102	104	84	84	M5
BEV 270	0520-20-xxxxxx	270	EI 105/45	0,85	3,70	105	88	110	84	69	M5
BEV 320	0520-20-xxxxxx	320	EI 105/60	0,93	4,70	105	104	110	84	85	M5
BEV 321	0520-20-xxxxxx	320	EI 120/41	1,15	4,30	120	88	121	90	70	M5
BEV 400	0520-20-xxxxxx	400	EI 120/53	1,25	5,40	120	100	120	90	82	M5
BEV 450	0520-20-xxxxxx	450	EI 120/61	1,30	6,20	120	108	120	90	90	M5
BEV 500	0520-20-xxxxxx	500	EI 120/73	1,46	7,30	120	120	120	90	102	M5
BEV 570	0520-20-xxxxxx	570	EI 135/52	1,76	6,60	135	105	131	104	86	M5
BEV 630	0520-20-xxxxxx	630	EI 135/62	1,75	7,00	135	115	131	104	96	M5
BEV 700	0520-20-xxxxxx	700	EI 135/72	1,90	8,00	135	125	131	104	106	M5
BEV 720	0520-20-xxxxxx	720	EI 150N/49	2,30	8,30	150	107	145	122	84	M6
BEV 800	0520-20-xxxxxx	800	EI 150N/66	2,60	10,1	150	124	145	122	101	M6
BEV 1000	0520-20-xxxxxx	1000	EI 150N/92	2,80	13,0	150	150	145	122	127	M6
BEV 1200	0520-20-xxxxxx	1200	EI 174/60	3,75	13,7	174	126	157	135	94	M6
BEV 1600	0520-20-xxxxxx	1600	EI 174/74	4,30	15,7	174	140	157	135	108	M6
BEV 1800	0520-20-xxxxxx	1800	EI 174/82	4,60	17,7	174	148	157	135	116	M6
BEV 2000	0520-20-xxxxxx	2000	EI 174/102	4,90	22,0	174	168	157	135	136	M6
BEV 2001	0520-20-xxxxxx	2000	EI 192/70	5,40	23,0	195	142	178	150	110	M8
BEV 2200	0520-20-xxxxxx	2200	EI 192/82	5,90	24,0	195	154	178	150	122	M8
BEV 2500	0520-20-xxxxxx	2500	EI 192/104	6,00	24,6	195	176	178	150	144	M8
BEV 3000	0520-20-xxxxxx	3000	EI 192/110	6,60	26,9	195	182	178	150	150	M8

General characteristics:

- transformer with customized voltages
- cost optimized
- welded
- open design for stationary installation
- back of hand and finger contact protected terminals, according to DGUV rule 3
- IP xx B, insulation class B, max ambient temperature 40°C (ta 40°C/B)
- available in several standards
- 50-250 VA versions with combined mounting plate
- UL approval (UL5085 - XPTQ2) available on request

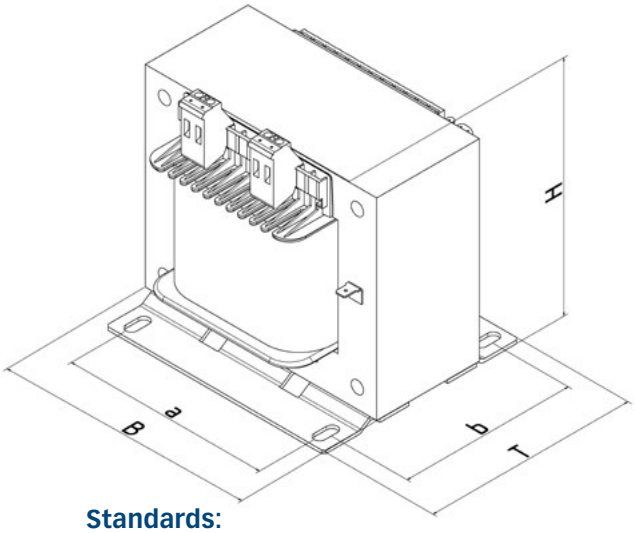

Standards:

EN 61558-2-2	Control transformers
EN 61558-2-4	Isolation transformer
EN 61558-2-6	Safety transformer
EN 61558-2-13	Auto transformers
UL 5085	Low voltage transfomers (XPTQ2)

Model	Art.-No.	Power [VA]	Size	Copper [kg]	Total [kg]	Dimensions [mm]					
						B	T	H	a	b	Screw
BE 25	0521-20-xxxxxx	25	EI 60/21	0,13	0,50	60	65	76	44	36	M3
BE 35	0521-20-xxxxxx	35	EI 60/31	0,14	0,52	60	75	76	44	46	M3
BE 50	0521-20-xxxxxx	50	EI 66/36	0,20	0,98	66	80	80	50	54	M4
BE 63	0521-20-xxxxxx	63	EI 78/27	0,27	1,20	78	71	89	56	45	M4
BE 80	0521-20-xxxxxx	80	EI 78/36	0,29	1,48	78	80	89	56	54	M4
BE 100	0521-20-xxxxxx	100	EI 84/43	0,37	1,68	85	68	93	64	47	M4
BE 160	0521-20-xxxxxx	160	EI 84/52	0,47	2,30	85	90	93	64	69	M4
BE 161	0521-20-xxxxxx	160	EI 96/35	0,57	2,38	96	78	104	84	60	M5
BE 200	0521-20-xxxxxx	200	EI 96/45	0,63	2,95	96	88	104	84	70	M5
BE 201	0521-20-xxxxxx	200	EI 105/37	0,71	3,20	105	80	110	84	62	M5
BE 250	0521-20-xxxxxx	250	EI 96/59	0,73	3,80	96	102	104	84	84	M5
BE 270	0521-20-xxxxxx	270	EI 105/45	0,85	3,70	105	88	110	84	69	M5
BE 320	0521-20-xxxxxx	320	EI 105/60	0,93	4,70	105	104	110	84	85	M5
BE 321	0521-20-xxxxxx	320	EI 120/41	1,15	4,30	120	88	121	90	70	M5
BE 400	0521-20-xxxxxx	400	EI 120/53	1,25	5,40	120	100	120	90	82	M5
BE 450	0521-20-xxxxxx	450	EI 120/61	1,30	6,20	120	108	120	90	90	M5
BE 500	0521-20-xxxxxx	500	EI 120/73	1,46	7,30	120	120	120	90	102	M5
BE 570	0521-20-xxxxxx	570	EI 135/52	1,76	6,60	135	105	131	104	86	M5
BE 630	0521-20-xxxxxx	630	EI 135/62	1,75	7,00	135	115	131	104	96	M5
BE 700	0521-20-xxxxxx	700	EI 135/72	1,90	8,00	135	125	131	104	106	M5
BE 720	0521-20-xxxxxx	720	EI 150N/49	2,30	8,30	150	107	145	122	84	M6
BE 800	0521-20-xxxxxx	800	EI 150N/66	2,60	10,1	150	124	145	122	101	M6
BE 1000	0521-20-xxxxxx	1000	EI 150N/92	2,80	13,0	150	150	145	122	127	M6
BE 1200	0521-20-xxxxxx	1200	EI 174/60	3,75	13,7	174	126	157	135	94	M6
BE 1600	0521-20-xxxxxx	1600	EI 174/74	4,30	15,7	174	140	157	135	108	M6
BE 1800	0521-20-xxxxxx	1800	EI 174/82	4,60	17,7	174	148	157	135	116	M6
BE 2000	0521-20-xxxxxx	2000	EI 174/102	4,90	22,0	174	168	157	135	136	M6
BE 2001	0521-20-xxxxxx	2000	EI 192/70	5,40	23,0	195	142	178	150	110	M8
BE 2200	0521-20-xxxxxx	2200	EI 192/82	5,90	24,0	195	154	178	150	122	M8
BE 2500	0521-20-xxxxxx	2500	EI 192/104	6,00	24,6	195	176	178	150	144	M8
BE 3000	0521-20-xxxxxx	3000	EI 192/110	6,60	26,9	195	182	178	150	150	M8

General characteristics:

- control transformer with standard voltages
- standing version
- mutually nested
- high overload capability
- voltage adjustment through +- % 5 tappings on the input side
- output in series (230V) or parallel (115V) switchable
- open design for stationary installation
- back of hand and finger contact protected terminals, according to DGUV rule 3
- IP xx B, insulation class B, max ambient temperature 40°C (ta 40°C/B)

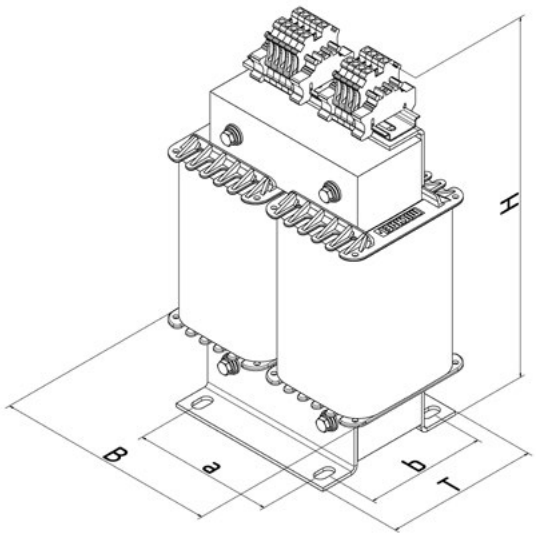

Standard voltages:

AC 220/230/240V // AC 115/230V
AC 380/400/420V // AC 115/230V
AC 440/460/480/500V // AC 115/230V

Standards:

EN 61558-2-2 Control transformers
EN 61558-2-4 Isolation transformer

Model	Power [VA]	230 // 115/230 V Art.-No.	400 // 115/230 V Art.-No.	500 // 115/230 V Art.-No.
BSUS 1500	1500	0522-10-001500	0523-10-001500	0524-10-001500
BSUS 2000	2000	0522-10-002000	0523-10-002000	0524-10-002000
BSUS 3000	3000	0522-10-003000	0523-10-003000	0524-10-003000
BSUS 4000	4000	0522-10-004000	0523-10-004000	0524-10-004000
BSUS 5000	5000	0522-10-005000	0523-10-005000	0524-10-005000
BSUS 6000	6000	0522-10-006000	0523-10-006000	0524-10-006000
BSUS 8000	8000	0522-10-008000	0523-10-008000	0524-10-008000
BSUS 10000	10000	0522-10-010000	0523-10-010000	0524-10-010000
BSUS 13000	13000	0522-10-013000	0523-10-013000	0524-10-013000
BSUS 16000	16000	0522-10-016000	0523-10-016000	0524-10-016000
BSUS 20000	20000	0522-10-020000	0523-10-020000	0524-10-020000

Model	Size	Copper [kg]	Total [kg]	Dimensions [mm]					
				B	T	H	a	b	Screw
BSUS 1500	UI 120/51	4,98	14,1	158	105	213	100	79	M6
BSUS 2000	UI 120/71	6,00	17,0	158	135	213	100	99	M6
BSUS 3000	UI 150/52	11,6	26,4	195	122	257	124	94	M8
BSUS 4000	UI 150/77	12,4	31,0	195	147	264	124	119	M8
BSUS 5000	UI 150/92	15,9	37,0	195	165	264	124	134	M8
BSUS 6000	UI 168/75	20,0	43,0	228	155	287	136	127	M8
BSUS 8000	UI 180/93	24,7	61,0	236	183	372	144	155	M8
BSUS 10000	UI 210/73	36,5	80,0	280	173	430	176	143	M10
BSUS 13000	UI 210/103	37,0	93,0	280	203	430	176	173	M10
BSUS 16000	UI 210/133	42,2	113	280	233	430	176	203	M10
BSUS 20000	UI 240/110	55,0	139	230	220	490	196	184	M12

General characteristics:

- control transformer with standart voltages
- laid
- mutually nested
- high overload capability
- voltage adjustment through +- % 5 tappings on the input side
- output in series (230V) or parallel (115V) switchable
- open design for stationary installation
- back of hand and finger contact protected terminals, according to DGUV rule 3
- IP xx B, insulation class B, max ambient temperature 40°C (ta 40°C/B)

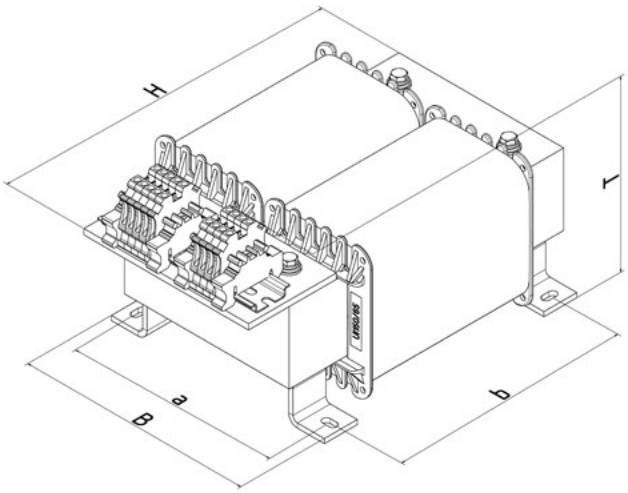

Standard voltages:

AC 220/230/240V // AC 115/230V
AC 380/400/420V // AC 115/230V
AC 440/460/480/500V // AC 115/230V

Standards:

EN 61558-2-2 Control transformers
EN 61558-2-4 Isolation transformer

Model	Power [VA]	230 // 115/230 V Art.-No.	400 // 115/230 V Art.-No.	500 // 115/230 V Art.-No.
BSUL 1500	1500	0525-10-001500	0526-10-001500	0527-10-001500
BSUL 2000	2000	0525-10-002000	0526-10-002000	0527-10-002000
BSUL 3000	3000	0525-10-003000	0526-10-003000	0527-10-003000
BSUL 4000	4000	0525-10-004000	0526-10-004000	0527-10-004000
BSUL 5000	5000	0525-10-005000	0526-10-005000	0527-10-005000
BSUL 6000	6000	0525-10-006000	0526-10-006000	0527-10-006000
BSUL 8000	8000	0525-10-008000	0526-10-008000	0527-10-008000
BSUL 10000	10000	0525-10-010000	0526-10-010000	0527-10-010000
BSUL 13000	13000	0525-10-013000	0526-10-013000	0527-10-013000
BSUL 16000	16000	0525-10-016000	0526-10-016000	0527-10-016000
BSUL 20000	20000	0525-10-020000	0526-10-020000	0527-10-020000

Model	Size	Copper [kg]	Total [kg]	Dimensions [mm]					
				B	T	H	a	b	Screw
BSUL 1500	UI 120/51	4,98	14,1	166	105	232	146	160	M6
BSUL 2000	UI 120/71	6,00	17,0	166	160	232	146	160	M6
BSUL 3000	UI 150/52	11,6	26,4	194	140	280	174	200	M6
BSUL 4000	UI 150/77	12,4	31,0	194	165	280	174	200	M6
BSUL 5000	UI 150/92	15,9	37,0	194	180	280	174	200	M6
BSUL 6000	UI 168/75	20,0	43,0	236	186	330	204	240	M8
BSUL 8000	UI 180/93	24,7	61,0	236	204	330	204	240	M8
BSUL 10000	UI 210/73	36,5	80,0	260	222	430	234	280	M10
BSUL 13000	UI 210/103	37,0	93,0	260	252	430	234	280	M10
BSUL 16000	UI 210/133	42,2	113	260	282	430	234	280	M10
BSUL 20000	UI 240/110	55,0	139	294	268	500	264	320	M12

General characteristics:

- unviversal control transformer with standard voltages
- input voltage: AC 208/230/380/400/440/460/480/500/525/550
- welded
- open design for stationary installation
- back of hand and finger contact protected terminals, according to DGUV rule 3
- IP xx B, insulation class B, max ambient temperature 40°C (ta 40°C/B)
- output voltage 2x AC 115 V or 2x AC 12V
- loss optimized versions on request

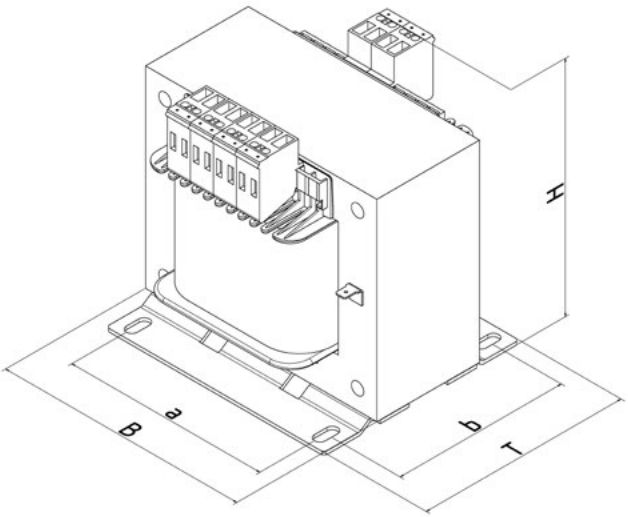

Standards:

EN 61558-2-2 Control transformers
EN 61558-2-4 Isolation transformer
EN 61558-2-6 Safety transformer

Output voltage: 2x AC 115 V

Model	Art.-No.	Power [VA]	Size	Copper [kg]	Total [kg]	Dimensions [mm]					
						B	T	H	a	b	Screw
BEUT 230-100	0528-10-000100	100	EI 84/43	0,35	2,10	85	104	83	64	61	M4
BEUT 230-200	0528-10-000200	200	EI 96/45	0,59	2,90	96	107	104	84	70	M5
BEUT 230-250	0528-10-000250	250	EI 96/59	0,69	3,70	96	121	104	84	84	M5
BEUT 230-320	0528-10-000320	320	EI 105/60	0,83	4,60	105	123	110	84	85	M5
BEUT 230-400	0528-10-000400	400	EI 120/61	1,21	6,10	120	124	120	90	90	M5
BEUT 230-500	0528-10-000500	500	EI 120/73	1,30	7,10	120	136	120	90	102	M5
BEUT 230-630	0528-10-000630	630	EI 135/62	1,80	7,10	135	115	131	104	96	M6
BEUT 230-800	0528-10-000800	800	EI 150N/66	2,10	9,60	150	129	145	122	101	M6
BEUT 230-1000	0528-10-001000	1000	EI 150N/92	2,40	13,0	150	155	145	122	127	M6
BEUT 230-1600	0528-10-001600	1600	EI 174/82	4,00	17,3	174	149	157	135	116	M6
BEUT 230-2500	0528-10-002500	2500	EI 192/104	5,50	24,1	195	176	178	150	144	M8

Output voltage: 2x AC 12 V

Model	Art.-No.	Power [VA]	Size	Copper [kg]	Total [kg]	Dimensions [mm]					
						B	T	H	a	b	Screw
BEUT 24-100	0529-10-000100	100	EI 84/43	0,35	2,10	85	104	83	64	61	M4
BEUT 24-200	0529-10-000200	200	EI 96/45	0,59	2,90	96	107	104	84	70	M5
BEUT 24-250	0529-10-000250	250	EI 96/59	0,69	3,70	96	121	104	84	84	M5
BEUT 24-320	0529-10-000320	320	EI 105/60	0,83	4,60	105	123	110	84	85	M5
BEUT 24-400	0529-10-000400	400	EI 120/61	1,21	6,10	120	124	120	90	90	M5
BEUT 24-500	0529-10-000500	500	EI 120/73	1,30	7,10	120	136	120	90	102	M5
BEUT 24-630	0529-10-000630	630	EI 135/62	1,80	7,10	135	115	131	104	96	M6

General characteristics:

- transformer with customized voltages
- cost optimized
- open design for stationary installation
- back of hand and finger contact protected terminals, according to DGUV rule 3
- up to 50A connection to transformer terminals, up top 340A terminals, above copper bars or cable lugs
- IP xx B, insulation class B up to 5000 VA ambient temperature 40°C (ta 40°C/F)
- Insulation class F from 6000 VA, max ambient temperature 40°C (ta 40°C/F)
- standard: standing constructed, other standards on request
- low losses versions, see BUVA or BUVU series
- available in various standards

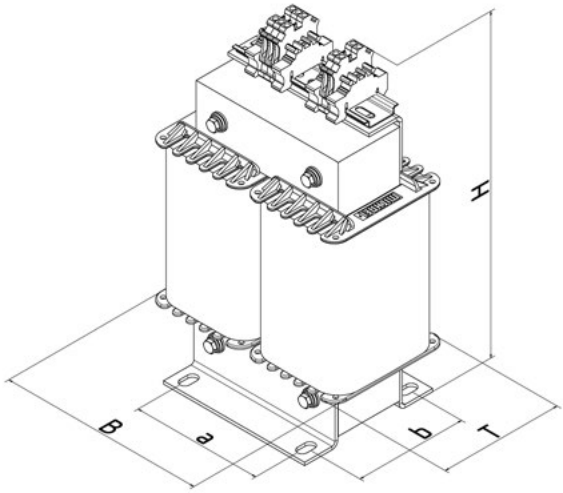

Standards:

EN 61558-2-2 Control transformers
EN 61558-2-4 Isolation transformer
EN 61558-2-6 Safety transformer
EN 61558-2-13 Auto transformers

Model	Art.-No.	Power [VA]	Size	Copper [kg]	Total [kg]	Dimensions [mm]					
						B	T	H	a	b	Screw
BUF 250	0530-20-xxxxxxx	250	UI 75/26	1,20	3,00	100	66	132	63	49	M5
BUF 500	0530-20-xxxxxxx	500	UI 90/31	2,10	5,00	120	75	157	76	56	M6
BUF 750	0530-20-xxxxxxx	750	UI 90/51	2,50	7,00	120	95	157	76	76	M6
BUF 1000	0530-20-xxxxxxx	1.000	UI 120/41	4,70	11,0	158	95	213	100	89	M6
BUF 1500	0530-20-xxxxxxx	1.500	UI 120/51	5,10	14,0	158	105	213	100	79	M6
BUF 2000	0530-20-xxxxxxx	2.000	UI 120/71	6,00	17,0	158	135	213	100	99	M6
BUF 3000	0530-20-xxxxxxx	3.000	UI 150/52	12,0	27,0	195	122	257	124	94	M8
BUF 4000	0530-20-xxxxxxx	4.000	UI 150/77	13,0	31,0	195	147	264	124	119	M8
BUF 5000	0530-20-xxxxxxx	5.000	UI 150/92	16,0	37,0	195	165	264	124	134	M8
BUF 6000	0530-20-xxxxxxx	6.000	UI 180/63	17,0	39,0	236	153	372	144	125	M8
BUF 8000	0530-20-xxxxxxx	8.000	UI 180/78	24,0	48,0	236	168	372	144	140	M8
BUF 10000	0530-20-xxxxxxx	10.000	UI 210/63	36,0	63,0	280	163	430	176	133	M10
BUF 13000	0530-20-xxxxxxx	13.000	UI 210/88	37,0	75,0	280	188	430	176	158	M10
BUF 16000	0530-20-xxxxxxx	16.000	UI 210/103	40,0	86,0	280	203	430	176	173	M10
BUF 20000	0530-20-xxxxxxx	20.000	UI 240/110	51,0	121	320	220	490	196	184	M12
BUF 25000	0530-20-xxxxxxx	25.000	UI 240/140	62,0	139	320	250	490	196	214	M12
BUF 30000	0530-20-xxxxxxx	30.000	UI 90/100-270/110	70,0	150	400	330	550	225	182	M12
BUF 40000	0530-20-xxxxxxx	40.000	UI 90/110-270/110	76,0	175	400	340	550	225	192	M12
BUF 50000	0530-20-xxxxxxx	50.000	UI 90/150-270/110	78,0	190	400	380	600	225	232	M12
BUF 63000	0530-20-xxxxxxx	63.000	UI 90/190-270/110	91,0	238	400	480	600	225	272	M12
BUF 80000	0530-20-xxxxxxx	80.000	UI 100/160-360/120	118	280	440	460	710	250	270	M12
BUF 100000	0530-20-xxxxxxx	100.000	UI 100/200-360/120	143	340	440	530	710	250	295	M12

General characteristics:

- transformer with customized voltages
- energy efficiency with grain oriented sheet (M165-35S)
- open design for stationary installation
- back of hand and finger contact protected terminals, according to DGUV rule 3
- up to 50A connection to transformer terminals, up top 340A terminals, above copper bars or cable lugs
- IP xx B, insulation class B up to 5000 VA ambient temperature 40°C (ta 40°C/E)
- Insulation class F from 6000 VA, max ambient temperature 40°C (ta 40°C/B)
- standard: standing constructed, other standards on request
- cost optimized, see BUF series
- available in various standards

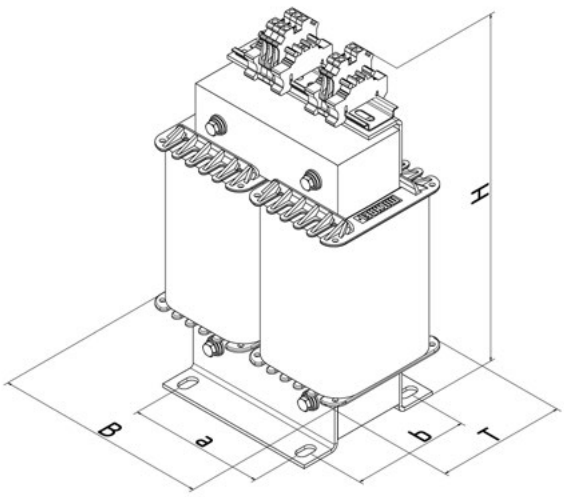

Standards:

EN 61558-2-2 Control transformers
EN 61558-2-4 Isolation transformer
EN 61558-2-6 Safety transformer
EN 61558-2-13 Auto transformers

Model	Art.-No.	Power [VA]	Size	Copper [kg]	Total [kg]	Dimensions [mm]					
						B	T	H	a	b	Screw
BUVA 250	0531-20-xxxxxxx	250	UI 75/26	1,20	3,00	100	66	132	63	49	M5
BUVA 500	0531-20-xxxxxxx	500	UI 90/31	2,10	5,00	120	75	157	76	56	M6
BUVA 750	0531-20-xxxxxxx	750	UI 90/51	2,50	7,00	120	95	157	76	76	M6
BUVA 1000	0531-20-xxxxxxx	1.000	UI 120/41	4,70	11,0	158	95	213	100	89	M6
BUVA 1500	0531-20-xxxxxxx	1.500	UI 120/51	5,10	14,0	158	105	213	100	79	M6
BUVA 2000	0531-20-xxxxxxx	2.000	UI 120/71	6,00	17,0	158	135	213	100	99	M6
BUVA 3000	0531-20-xxxxxxx	3.000	UI 150/52	12,0	27,0	195	122	257	124	94	M8
BUVA 4000	0531-20-xxxxxxx	4.000	U I150/77	13,0	31,0	195	147	264	124	119	M8
BUVA 5000	0531-20-xxxxxxx	5.000	UI 150/92	16,0	37,0	195	165	264	124	134	M8
BUVA 6000	0531-20-xxxxxxx	6.000	UI 180/63	17,0	39,0	236	153	372	144	125	M8
BUVA 8000	0531-20-xxxxxxx	8.000	UI 180/78	24,0	48,0	236	168	372	144	140	M8
BUVA 10000	0531-20-xxxxxxx	10.000	UI 210/63	36,0	63,0	280	163	430	176	133	M10
BUVA 13000	0531-20-xxxxxxx	13.000	UI 210/88	37,0	75,0	280	188	430	176	158	M10
BUVA 16000	0531-20-xxxxxxx	16.000	UI 210/103	40,0	86,0	280	203	430	176	173	M10
BUVA 20000	0531-20-xxxxxxx	20.000	UI 240/110	51,0	121	320	220	490	196	184	M12
BUVA 25000	0531-20-xxxxxxx	25.000	UI 240/140	62,0	139	320	250	490	196	214	M12
BUVA 30000	0531-20-xxxxxxx	30.000	UI 90/80-270/110	70,0	150	400	310	550	225	162	M12
BUVA 40000	0531-20-xxxxxxx	40.000	UI 90/100-270/110	86,0	185	400	330	550	225	182	M12
BUVA 50000	0531-20-xxxxxxx	50.000	UI 90/130-270/110	90,0	205	400	360	550	225	212	M12
BUVA 63000	0531-20-xxxxxxx	63.000	UI 100/110-360/120	115	240	440	480	690	250	205	M12
BUVA 80000	0531-20-xxxxxxx	80.000	UI 100/140-360/120	123	265	440	480	690	250	235	M12
BUVA 100000	0531-20-xxxxxxx	100.000	UI 100/180-360/120	161	340	440	520	690	250	275	M12
BUVA 130000	0531-20-xxxxxxx	130.000	UI 120/160-400/140	158	376	520	480	790	300	280	M12
BUVA 160000	0531-20-xxxxxxx	160.000	UI 120/200-400/140	165	430	520	520	790	300	320	M12
BUVA 200000	0531-20-xxxxxxx	200.000	UI 140/150-540/170	224	515	620	500	980	375	290	M16
BUVA 250000	0531-20-xxxxxxx	250.000	UI 140/190-540/170	235	620	620	540	980	375	330	M16
BUVA 315000	0531-20-xxxxxxx	315.000	UI 160/190-640/170	240	735	660	530	1120	400	350	M16
BUVA 400000	0531-20-xxxxxxx	400.000	UI 160/240-640/170	245	890	660	620	1120	400	400	M16

General characteristics:

- transformer with customized voltages
- cost optimized
- open design for stationary installation
- back of hand and finger contact protected terminals, according to DGUV rule 3
- up to 50A connection to transformer terminals, up top 340A terminals, above copper bars or cable lugs
- IP xx B, insulation class B up to 5000 VA ambient temperature 40°C (ta 40°C/F)
- Insulation class F from 6000 VA, max ambient temperature 40°C (ta 40°C/F)
- standard: standing constructed, other standards on request
- low losses versions, see BUVA or BUVU series
- available in various standards

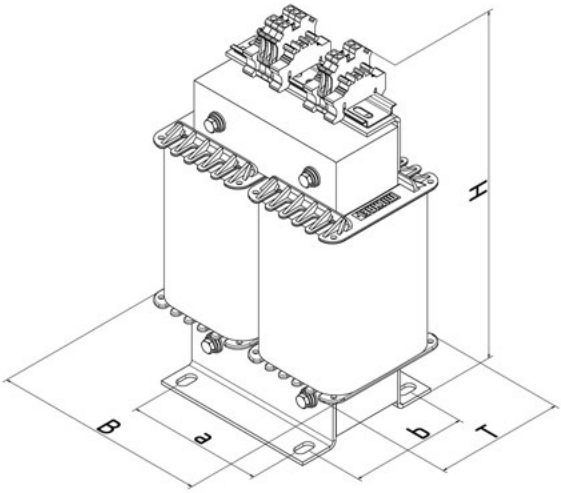

Standards:

EN 61558-2-2 Control transformers
EN 61558-2-4 Isolation transformer
EN 61558-2-6 Safety transformer
EN 61558-2-13 Auto transformers

Model	Art.-No.	Power [VA]	Size	Copper [kg]	Total [kg]	Dimensions [mm]					
						B	T	H	a	b	Screw

General characteristics:

- for stepwise speed control of fan motors
- voltage AC 230 V/AC 80-100-130-160-190-230 v
- welded
- housing with selector switch and protection optional available
- back of hand and finger contact protected terminals, according to DGUV rule 3
- IP xx B, insulation class B, max ambient temperature 40°C (ta 40°C/B)
- loss optimized versions on request

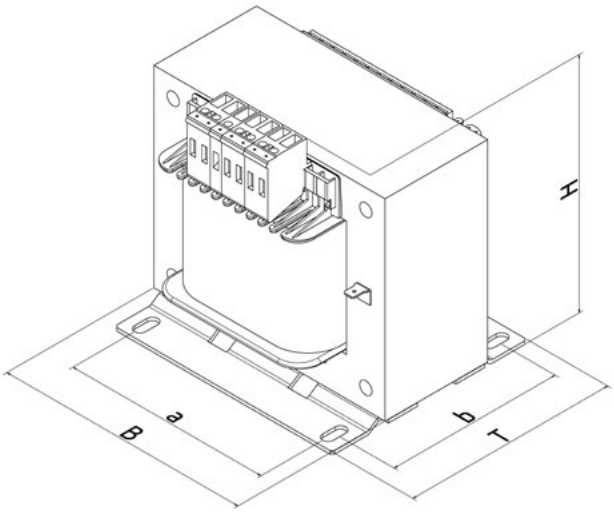

Standards:

EN 61558-2-13 Auto transformers

Model	Art.-No.	Current [A]	Copper [kg]	Total [kg]	Dimensions [mm]					
					B	T	H	a	b	Screw
BELT 2301	0533-10-000001	1	0,19	1,00	66	78	85	50	52	M4
BELT 2302	0533-10-000002	2	0,34	1,50	85	70	96	64	47	M4
BELT 2304	0533-10-000004	4	0,57	2,90	96	90	104	84	70	M5
BELT 2307	0533-10-000007	7	1,08	4,40	120	88	121	90	70	M5
BELT 23010	0533-10-000010	10	1,30	6,00	120	108	120	90	90	M6
BELT 23013	0533-10-000013	13	1,61	7,50	135	115	131	104	96	M6
BELT 23016	0533-10-000016	16	1,91	8,70	135	125	131	104	106	M6
BELT 23020	0533-10-000020	20	2,37	10,2	150	124	145	122	101	M6
BELT 23025	0533-10-000025	25	2,80	13,4	150	150	145	122	127	M6
BELT 23030	0533-10-000030	30	3,40	15,2	174	138	157	135	106	M6

General characteristics:

- Transformer in impact resistant, self extinguishing non hygroskopic fiberglass housing IP44
- safety class 2
- supply cable 5m (protective contact or CEE plug at buyer's option)
- output at protective contact socket (PE not connected)
- Fuse, limited inrush current
- standard voltage: input AC 230V, output AC 230V
- max ambient temperature 40°C (ta 40°C)
- other voltages, models, sockets and plugs on request
- portable

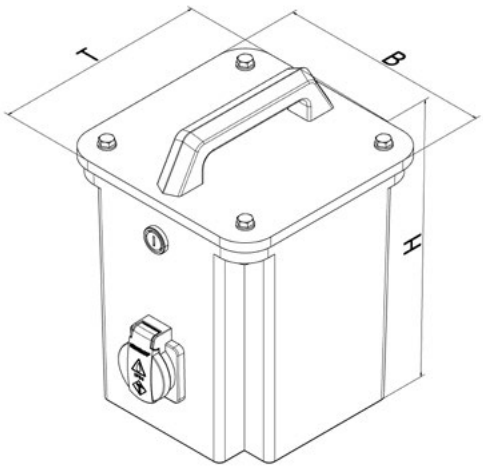

Standards:

EN 61558-2-4 Isolation transformer
EN 61558-2-23 Transformers for building sites

Model	Art.-No.	Power [VA]	Copper [kg]	Total [kg]	Dimensions [mm]		
					B	T	H
BBIT 250	0534-10-000250	250	0,80	7,00	166	250	219
BBIT 500	0534-10-000500	500	1,50	11,0	166	250	219
BBIT 800	0534-10-000800	800	2,50	13,0	192	276	259
BBIT 1000	0534-10-001000	1000	3,00	17,0	192	276	259
BBIT 1600	0534-10-001600	1600	3,80	22,0	340	265	280
BBIT 2000	0534-10-002000	2000	5,20	26,0	340	265	280
BBIT 2500	0534-10-002500	2500	5,90	31,0	340	265	280
BBIT 3000	0534-10-003000	3000	6,80	33,0	340	265	280
BBIT 3600	0534-10-003600	3600	12,3	36,0	340	265	280

General characteristics:

- Input voltage AC 230 V
- Output voltage AC 230 V with center tap
- energy efficiency with grain oriented sheet M165-35S
- max no load voltage AC 250V between phases
- no load current max 3% of nominal current
- short circuit voltage uk max 3%
- Inrush current max 12x nominal current
- reinforced insulation and isolated shield foil between windings
- structurally insulated mounting brackets
- Temperature monitoring with PTC 120°C in each coil
- shield winding with lead out insulated connection
- back of hand and finger protected terminals, according to DGUV rule 3
- IP xx B, isolating class E, max ambient temperature 40°C (ta 40°C/E)
- vacuum insulated
- on overload protection is not permitted merely a short circuit protection
- other voltages, power, designs on request

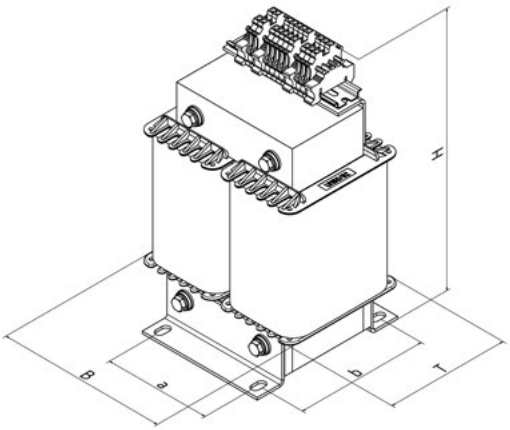

Standards:

EN 61558-2-15 Transformers for supply of medical rooms

Model	Art.-No.	Power [kVA]	Size	Copper [kg]	Total [kg]	Dimensions [mm]					
						B	T	H	a	b	Screw
BMED 3000	0545-10-003000	3,0	UI 150/77	12,8	31	195	147	330	124	139	M8
BMED 4000	0545-10-004000	4,0	UI 150/92	14,1	35	195	165	330	124	154	M8
BMED 5000	0545-10-005000	5,0	UI 150/103	16,8	40	195	176	330	124	165	M8
BMED 6300	0545-10-006300	6,3	UI 180/78	22,1	46	236	168	370	144	160	M8
BMED 8000	0545-10-008000	8,0	UI 210/63	32,0	59	280	163	430	176	153	M10
BMED 10000	0545-10-010000	10,0	UI 210/88	39,9	78	280	188	430	176	178	M10

General characteristics:

- Input voltage AC 230 V ±5% ±10%
- Output voltage AC 23/24/25/26/27/28 V
- reinforced insulation and isolated shield foil between the windings
- structurally insulated mounting brackets
- shield winding with lead out insulated connection
- back of hand and finger protected terminals, according to DGUV rule 3
- IP xx B, isolating class E, max ambient temperature 40°C
- other voltages, power, designs on request

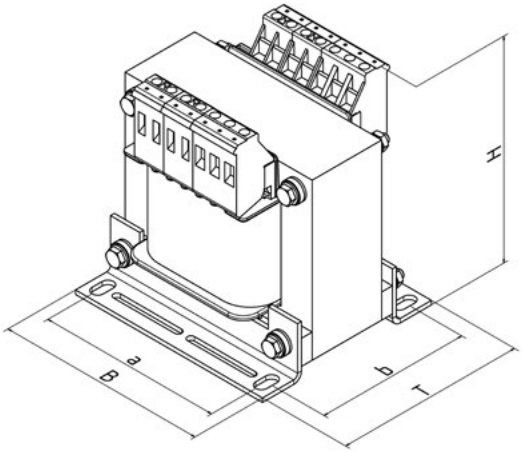

Standards:

EN 61558-2-6 Safety transformer

Model	Art.-No.	Power [VA]	Output current [A]	Size	Copper [kg]	Total [kg]	Dimensions [mm]					
							B	T	H	a	b	Screw
BOPL 100	0546-10-000100	100	3,57	EI 84/43	0,33	1,68	85	68	93	64	57	M4
BOPL 160	0546-10-000160	160	5,70	EI 96/45	0,45	2,95	96	88	104	84	80	M5
BOPL 270	0546-10-000270	270	9,64	EI 105/60	0,63	4,70	105	104	110	84	95	M5
BOPL 400	0546-10-000400	400	14,3	EI 120/61	1,00	6,20	120	108	120	90	100	M5
BOPL 630	0546-10-000630	630	22,5	EI 135/62	1,76	7,00	135	115	131	104	106	M5
BOPL 800	0546-10-000800	800	28,6	EI 150N/66	2,43	10,1	150	124	145	122	111	M6
BOPL 1000	0546-10-001000	1000	35,7	EI 150N/92	2,64	13,0	150	150	145	122	137	M6

Notes

2 | THREE-PHASE TRANSFORMERS

Breimer Roth Transformers are characterized after the world's common and understandable, for the user approach, its three-phase transformers as follows:
The first capital letter describes the primary input winding and the second lower case letter the secondary output winding.

If there are not contrary ordering information with more accurate location assignment of upper and under voltage formulated, the labelling type above is selected.

Capacity of the neutral conductor (neutral point):
In the star - star connection (Y y) the neutral point may only be charged with the full rated current if the neutral conductor of the supply system is connected to the primary side of the transformer neutral point.

For three-phase autotransformers, which are made with the Star-centowinding, the same rule applies. if a fully resilient star point may be desired , but is not available on the grid side , the double Zickzack.circuit (ZZan0) must be selected.

Ratio	Vector group	Vector diagram primary	Vector diagram secondary	Circuit diagram primary	Circuit diagram secondary	secondary neutral point
0	D d 0	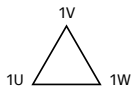	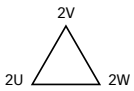	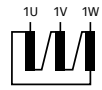		unavailable
0	Y y 0	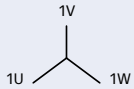	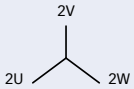	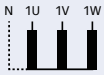	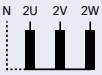	load 10 %
0	D z 0	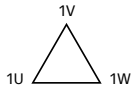	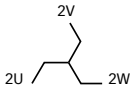	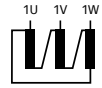	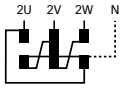	loadable
5	D y 5	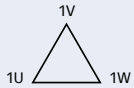	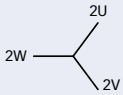	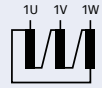	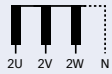	loadable
5	Y d 5	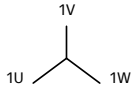	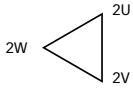	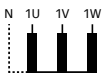		unavailable
5	Y z 5	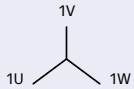	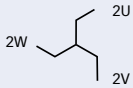	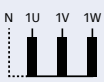	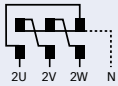	loadable
6	D d 6	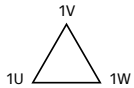	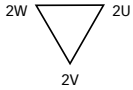	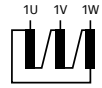		unavailable
6	Y y 6	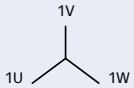	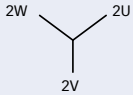	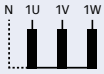		load 10 %
6	D z 6	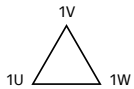	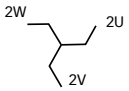	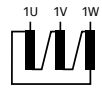	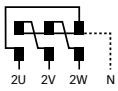	loadable
11	D y 11	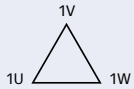	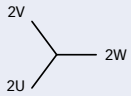	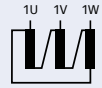	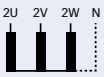	loadable
11	Y d 11	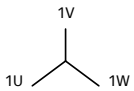	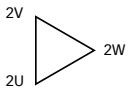	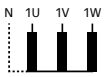		unavailable
11	Y z 11	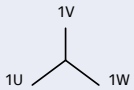	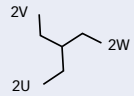	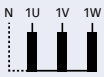	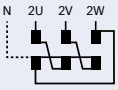	loadable
0	Y a 0	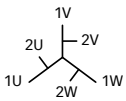		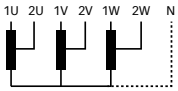		load 10 %
0	ZZa0	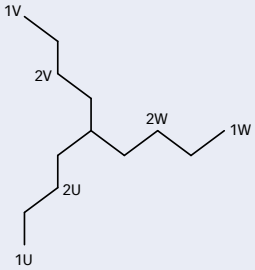		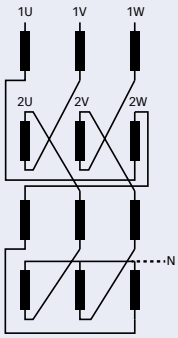		loadable

The use of auto transformers in all countries with delta grids, should be examined particularly (e.g. USA, Japan, Korea etc.). There may be problems with the specific network forms and their grounding options. In the diagram shown below, some error cases are illustrated and described. Here, the blue graph represents the customer's network and the black graphic the autotransformer.
We are happy to advise you on this, with more details.

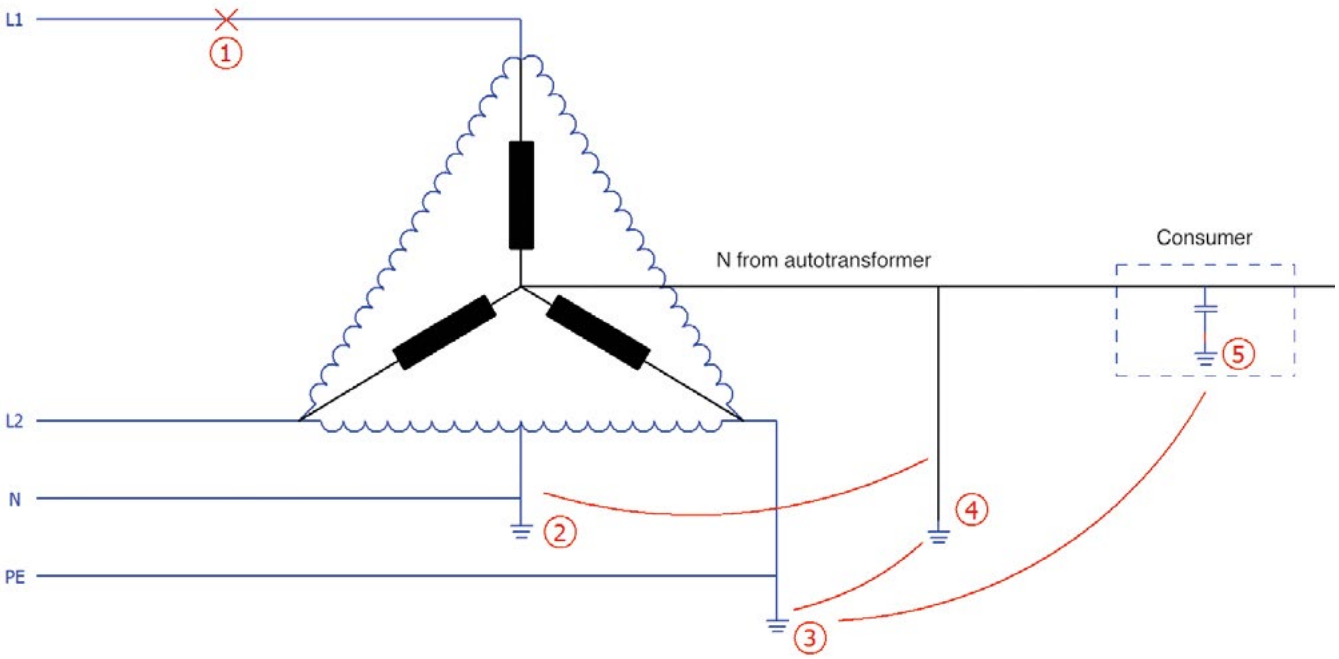

1. Failure of a primary-side phase. The neutral point can uncontrollably reach a higher potential. This can lead to the destruction of the consumer and the transformer.

2. Network: Center tap grounded: This is a typical network in North America. For example, here are tensions arising from 3x 480V or 2 x 240V to the grounded center.

3. Network: Corner grounded delta: Also typical network configuration in North America and Asia. Here 3 core cables are mostly used, whereby the green / yellow wire is simultaneously used for the outer conductor. This is by no means to be confused with the cables used in european countries for single-phase network!

4. In many applications, the neutral of the transformer is grounded. This is partly also required in various standards and regulations. This ground connection would have a direct contact with the „center tap grounded" or „corner grounded" point and therefore a short circuit to the outer conductor!

5. Output section load, such as Line filter, main switch, inverter (DC links) are usually equipped with Y capacitors. These cause the same error as described in point 4.

Application form for customized three-phase transformers

Company _____

Street _____

Zip code, city _____

Contact person _____

Phone _____

Mail _____

pieces _____

☐ Isolating transformer ☐ Safety transformer ☐ Auto transformer ☐ Control transformer

☐ Other _____

Power _____

Input voltage _____

Input current _____

Output voltage _____

Output current _____

Vector group _____

Duty cycle ☐ S1 / 100% ED ☐ Others _____

Frequency ☐ 50/60 Hz ☐ 60 Hz ☐ Others _____

Temperature class ☐ ta 40°C/E ☐ ta 40°C/B ☐ ta 40°C/F ☐ Others _____

Protection class ☐ IP xx B (IP 00) ☐ IP 23 ☐ IP 54 ☐ Casting

☐ Others _____

Housing color ☐ RAL 7035 ☐ RAL 7032 ☐ Others _____

Standards ☐ EN 61558 ☐ UL/CSA ☐ Others _____

Primary connection ☐ Terminals ___mm² ☐ Solder lug ☐ Free ends ☐ Others _____

Secondary connection ☐ Terminals ___mm² ☐ Solder lug ☐ Free ends ☐ Others _____

Attachment ☐ Mounting brackets ☐ Foot bar ☐ Studs

Documentation ☐ Inspection record ☐ Data sheet ☐ Circuit diagram ☐ Serial numbers

Appointment _____

Others _____

General characteristics:

- for stepwise speed control of fan motors
- voltage: AC 400 V / AV 140-180-230-280-330 V
- welded
- open design for stationary installation
- housing with selector switch and protection optionally available
- back of hand and finger contact protected terminals, according to DGUV rule 3
- IP xx B, insulation class B, max ambient temperature 40°C (ta 40°C/B)
- scott-v-circuit
- loss optimized versions on request
- supplied in a set (2 Transformers)
- copper weights are also per set

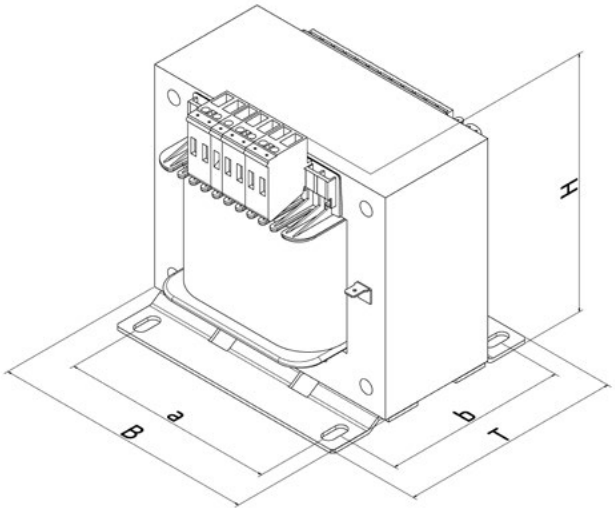

Standards:

EN 61558-2-13 Auto transformers

Model	Art.-No.	Current [A]	Copper [kg]	Total [kg]	Dimensions [mm]					
					B	T	H	a	b	Screw
BDLT 4001	0600-10-000001	1	0,54	1,60	78	80	89	56	54	M4
BDLT 4002	0600-10-000002	2	1,14	2,50	96	78	104	84	60	M5
BDLT 4004	0600-10-000004	4	1,62	4,40	105	104	110	84	85	M5
BDLT 4007	0600-10-000007	7	3,38	6,80	135	105	131	104	86	M6
BDLT 40010	0600-10-000010	10	4,16	8,80	135	125	131	104	106	M6
BDLT 40012	0600-10-000012	12	4,62	10,2	150	124	145	122	101	M6
BDLT 40015	0600-10-000015	15	4,84	12,9	150	150	145	122	127	M6
BDLT 40020	0600-10-000020	20	7,90	17,1	174	148	157	135	116	M6
BDLT 40025	0600-10-000025	25	9,74	21,9	174	168	157	135	136	M6
BDLT 40030	0600-10-000030	30	11,3	23,6	195	154	178	150	122	M8

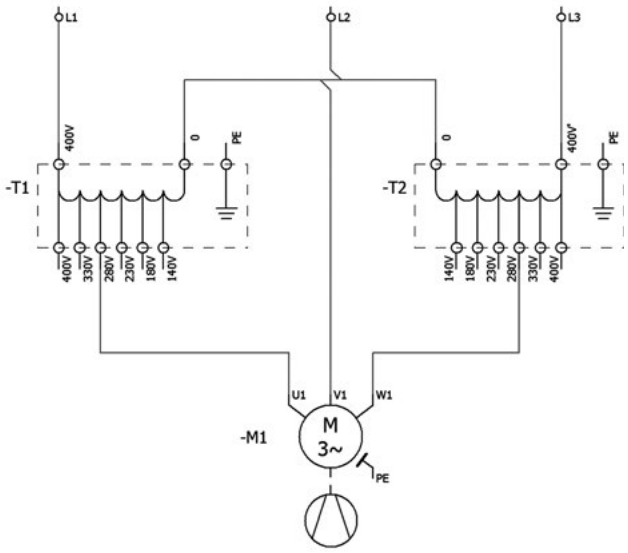

General characteristics:

- universal transformer wit standard voltages (3AC 190 to 600V)
- input: 3AC 190|200|208|220|230|240|254|265|277|289|300|312|323 330|346|360|380|400|415|440|460|480|500|520|540|560|575|600
- output: 3AC 400V
- separated winding, with fully loadable neutral point
- open design for stationary installation
- back of hand and finger contact protected terminals, according to DGUV rule 3
- IP xx B, insulation class F, max ambient temperature 40°C (ta 40°C/F)
- other powers or power loss optimized versions on request

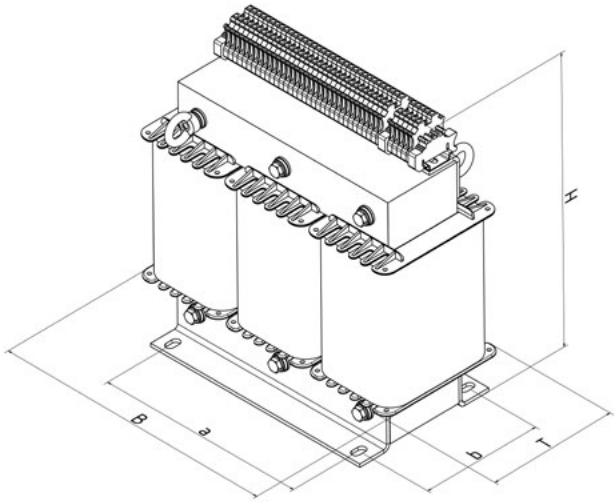

Standards:

EN 61558-2-4 Isolation transformer

Model	Art.-No.	Power [kVA]	Size	Copper [kg]	Total [kg]	Dimensions [mm]					
						B	T	H	a	b	Screw
BDUT 3000	0601-10-003000	3	3UI 132/72	8,30	30,0	290	152	250	200	102	M8
BDUT 5000	0601-10-005000	5	3UI 150/77	14,7	43,2	310	165	280	224	120	M8
BDUT 8000	0601-10-008000	8	3UI 168/92	18,3	60,6	360	170	290	247	144	M8
BDUT 10000	0601-10-010000	10	3UI 180/93	24,1	74,0	400	220	380	264	155	M8
BDUT 12000	0601-10-012000	12	3UI 210/73	40,9	93,2	460	230	440	316	143	M10
BDUT 16000	0601-10-016000	16	3UI 210/88	46,4	110	460	245	440	316	158	M10
BDUT 20000	0601-10-020000	20	3UI 210/133	50,4	144	460	285	450	316	203	M10
BDUT 25000	0601-10-025000	25	3UI 240/83	73,0	170	550	283	490	356	157	M14
BDUT 30000	0601-10-030000	30	3UI 240/110	74,9	176	550	310	490	356	184	M14
BDUT 35000	0601-10-035000	35	3UI 240/140	80,2	209	650	320	510	356	184	M14
BDUT 40000	0601-10-040000	40	3UI 240/140	93,9	223	650	400	510	356	214	M14

General characteristics:

- transformer with customized voltages up to 1000V, larger voltage on request
- cost optimized model with sheet (M330-50A)
- reduced sizes
- open design for stationary installation
- back of hand finger protected terminals, according to DGUV rule 3 (IPxxB)
- electric currents above 340A, needs electric connections on cable lugs or copper plates (IP00)
- insulation class B, max ambient temperature 40°C (ta 40°C/B) up to 3500 VA
- insulation class F, max ambient temperature 40°C (ta 40°C/F) from 4000 VA
- available in various standards
- standard: standing construction with mounting brakets
- in sizes up to 40 kVA change the measurements of high and depth from currents higher than 50A
- loss optimized models, see BDVA

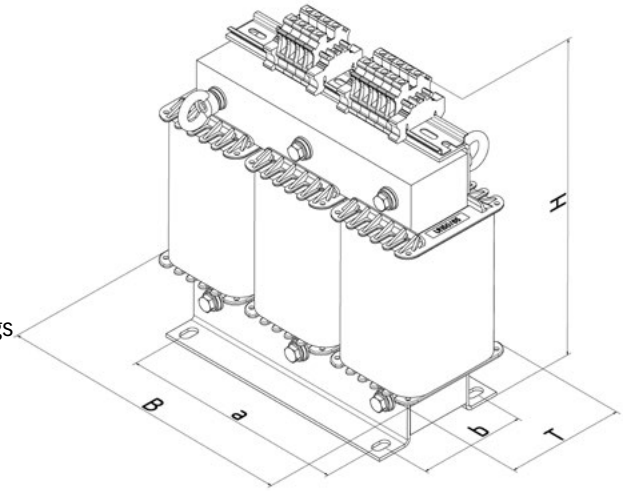

Standards:

EN 61558-2-2	Control transformers
EN 61558-2-4	Isolation transformers
EN 61558-2-6	Safety transformers
EN 61558-2-13	Auto transformers

Model	Art.-No.	Power [VA]	Size	Copper [kg]	Total [kg]	Dimensions [mm]					
						B	T	H	a	b	Screw
BDF 50	0602-20-xxxxxx	50	3UI 48/26	0,44	1,40	96	86	100	71	48	M4
BDF 100	0602-20-xxxxxx	100	3UI 60/21	0,67	1,70	120	81	110	90	39	M4
BDF 200	0602-20-xxxxxx	200	3UI 60/31	0,87	2,50	120	91	110	90	49	M4
BDF 300	0602-20-xxxxxx	300	3UI 75/26	1,58	4,40	150	86	135	113	49	M5
BDF 400	0602-20-xxxxxx	400	3UI 75/41	1,90	6,10	150	101	135	113	64	M5
BDF 500	0602-20-xxxxxx	500	3UI 90/31	2,96	7,40	180	91	155	136	57	M6
BDF 700	0602-20-xxxxxx	700	3UI 90/41	3,40	9,30	180	101	155	136	67	M6
BDF 900	0602-20-xxxxxx	900	3UI 90/51	3,71	11,1	180	111	155	136	77	M6
BDF 1000	0602-20-xxxxxx	1.000	3UI 114/40	5,60	13,5	228	110	195	176	71	M6
BDF 1300	0602-20-xxxxxx	1.300	3UI 114/40	6,24	15,1	228	110	195	176	71	M6
BDF 1600	0602-20-xxxxxx	1.600	3UI 120/41	6,83	17,5	240	111	205	185	81	M8
BDF 2000	0602-20-xxxxxx	2.000	3UI 114/64	7,09	20,9	228	134	195	176	95	M6
BDF 2500	0602-20-xxxxxx	2.500	3UI 120/71	8,32	25,3	240	141	205	185	101	M8
BDF 3000	0602-20-xxxxxx	3.000	3UI 132/60	10,3	29,5	265	140	230	200	90	M8
BDF 3500	0602-20-xxxxxx	3.500	3UI 132/72	10,9	32,5	265	152	230	200	102	M8
BDF 4000	0602-20-xxxxxx	4.000	3UI 150/52	12,2	33,0	300	140	260	224	94	M8
BDF 5000	0602-20-xxxxxx	5.000	3UI 150/65	15,2	39,0	300	153	260	224	108	M8
BDF 6000	0602-20-xxxxxx	6.000	3UI 150/77	18,1	48,5	300	165	260	224	120	M8
BDF 7000	0602-20-xxxxxx	7.000	3UI 150/92	20,0	54,0	300	180	260	224	134	M8
BDF 8000	0602-20-xxxxxx	8.000	3UI 150/103	19,2	56,0	300	191	260	224	145	M8
BDF 9000	0602-20-xxxxxx	9.000	3UI 180/63	28,7	64,0	360	165	310	264	125	M8
BDF 10000	0602-20-xxxxxx	10.000	3UI 180/78	29,6	72,0	360	180	310	264	140	M8
BDF 13000	0602-20-xxxxxx	13.000	3UI 180/93	32,1	82,0	360	195	310	264	155	M8
BDF 16000	0602-20-xxxxxx	16.000	3UI 210/73	46,7	99,0	420	180	360	316	143	M10
BDF 20000	0602-20-xxxxxx	20.000	3UI 210/88	54,4	118	420	195	360	316	158	M10
BDF 24000	0602-20-xxxxxx	24.000	3UI 210/103	54,1	128	420	210	360	316	173	M10
BDF 28000	0602-20-xxxxxx	28.000	3UI 210/133	59,2	154	420	240	360	316	203	M10
BDF 30000	0602-20-xxxxxx	30.000	3UI 210/133	65,0	160	420	240	360	316	203	M10
BDF 36000	0602-20-xxxxxx	36.000	3UI 240/110	77,8	178	480	240	415	356	184	M12
BDF 40000	0602-20-xxxxxx	40.000	3UI 240/140	89,3	218	480	270	415	356	214	M12
BDF 50000	0602-20-xxxxxx	50.000	90/100-270/110	115	227	600	350	550	430	182	M16
BDF 63000	0602-20-xxxxxx	63.000	90/130-270/110	140	280	600	395	550	430	212	M16
BDF 80000	0602-20-xxxxxx	80.000	90/180-270/110	155	349	600	450	550	430	262	M16
BDF 100.000	0602-20-xxxxxx	100.000	100/150-360/120	171	387	660	465	710	460	244	M16
BDF 130.000	0602-20-xxxxxx	130.000	100/190-360/120	234	500	660	550	710	460	284	M16

General characteristics:

- transformer with customized voltages up to 1000V, higher voltage on request
- loss optimized with grain oriented sheet M165-35S
- open design for stationary installation
- back of hand finger protected terminals, according to DGUV rule 3
- currents above 340A, connections on cable lugs or copper plates (IP00)
- insulation class B, max ambient temperature 40°C (ta 40°C/B) up to 3500 VA
- insulation class F, max ambient temperature 40°C (ta 40°C/F) from 4000 VA
- available in various standards
- standard: standing construction with mounting brakets
- in sizes up to 40kVA change the measurements of high and depth from currents higher than 50A
- cost optimized model, look at BDF or BDH

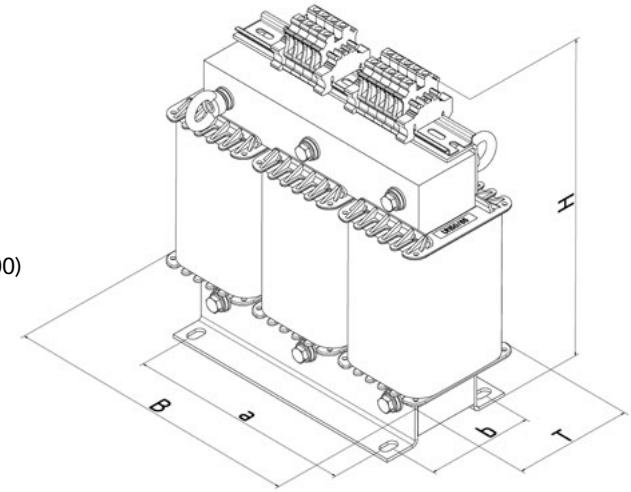

Standards:

EN 61558-2-2	Control transformers
EN 61558-2-4	Isolation transformers
EN 61558-2-6	Safety transformers
EN 61558-2-13	Auto transformers

Model	Art.-No.	Power [VA]	Size	Copper [kg]	Total [kg]	Dimensions [mm]					
						B	T	H	a	b	Screw
BDVA 50	0603-20-xxxxxx	50	3UI 48/26	0,44	1,40	96	86	100	71	48	M4
BDVA 100	0603-20-xxxxxx	100	3UI 60/21	0,67	1,70	120	81	110	90	39	M4
BDVA 200	0603-20-xxxxxx	200	3UI 60/31	0,87	2,50	120	91	110	90	49	M4
BDVA 300	0603-20-xxxxxx	300	3UI 75/26	1,58	4,40	150	86	135	113	49	M5
BDVA 400	0603-20-xxxxxx	400	3UI 75/41	1,90	6,10	150	101	135	113	64	M5
BDVA 500	0603-20-xxxxxx	500	3UI 90/31	2,96	7,40	180	91	155	136	57	M6
BDVA 700	0603-20-xxxxxx	700	3UI 90/41	3,40	9,30	180	101	155	136	67	M6
BDVA 900	0603-20-xxxxxx	900	3UI 90/51	3,71	11,1	180	111	155	136	77	M6
BDVA 1000	0603-20-xxxxxx	1.000	3UI 114/40	3,37	12,5	228	110	195	176	71	M6
BDVA 1300	0603-20-xxxxxx	1.300	3UI 114/40	6,24	15,1	228	110	195	176	71	M6
BDVA 1600	0603-20-xxxxxx	1.600	3UI 120/41	6,83	17,5	240	111	205	185	81	M8
BDVA 2000	0603-20-xxxxxx	2.000	3UI 114/64	7,09	20,9	228	134	195	176	95	M6
BDVA 2500	0603-20-xxxxxx	2.500	3UI 120/71	8,32	25,3	240	141	205	185	101	M8
BDVA 3000	0603-20-xxxxxx	3.000	3UI 132/60	10,3	29,5	265	140	230	200	90	M8
BDVA 3500	0603-20-xxxxxx	3.500	3UI 132/72	10,9	32,5	265	152	230	200	102	M8
BDVA 4000	0603-20-xxxxxx	4.000	3UI 150/52	12,2	33,0	300	140	260	224	94	M8
BDVA 5000	0603-20-xxxxxx	5.000	3UI 150/65	15,2	39,0	300	153	260	224	108	M8
BDVA 6000	0603-20-xxxxxx	6.000	3UI 150/77	18,1	48,5	300	165	260	224	120	M8
BDVA 7000	0603-20-xxxxxx	7.000	3UI 150/92	20,0	54,0	300	180	260	224	134	M8
BDVA 8000	0603-20-xxxxxx	8.000	3UI 150/103	19,2	56,0	300	191	260	224	145	M8
BDVA 9000	0603-20-xxxxxx	9.000	3UI 180/63	28,7	64,0	360	165	310	264	125	M8
BDVA 10000	0603-20-xxxxxx	10.000	3UI 180/78	29,6	72,0	360	180	310	264	140	M8
BDVA 13000	0603-20-xxxxxx	13.000	3UI 180/93	32,1	82,0	360	195	310	264	155	M8
BDVA 16000	0603-20-xxxxxx	16.000	3UI 210/73	46,7	99,0	420	180	360	316	143	M10
BDVA 20000	0603-20-xxxxxx	20.000	3UI 210/88	54,4	118	420	195	360	316	158	M10
BDVA 24000	0603-20-xxxxxx	24.000	3UI 210/103	54,1	128	420	210	360	316	173	M10
BDVA 28000	0603-20-xxxxxx	28.000	3UI 210/133	59,2	154	420	240	360	316	203	M10
BDVA 32000	0603-20-xxxxxx	32.000	3UI 210/133	60,1	155	420	240	360	316	203	M10
BDVA 36000	0603-20-xxxxxx	36.000	3UI 240/110	77,8	178	480	240	415	356	184	M12
BDVA 40000	0603-20-xxxxxx	40.000	3UI 240/140	89,3	218	480	270	415	356	214	M12
BDVA 50000	0603-20-xxxxxx	50.000	90/100/270/110	92,0	220	600	380	600	430	182	M16
BDVA 63000	0603-20-xxxxxx	63.000	90/110/270/110	127	244	600	390	600	430	192	M16
BDVA 80000	0603-20-xxxxxx	80.000	90/130/270/110	138	277	600	410	600	430	212	M16
BDVA 100.000	0603-20-xxxxxx	100.000	90/170-270/110	154	334	600	510	600	430	252	M16
BDVA 130.000	0603-20-xxxxxx	130.000	100/160-360/120	192	409	660	500	710	460	254	M16
BDVA 160.000	0603-20-xxxxxx	160.000	100/190-360/120	242	494	660	530	710	460	284	M16
BDVA 200.000	0603-20-xxxxxx	200.000	120/150-400/140	280	572	780	505	790	560	266	M16
BDVA 250.000	0603-20-xxxxxx	250.000	120/190-400/140	363	708	780	545	790	560	306	M16
BDVA 315.000	0603-20-xxxxxx	315.000	140/160-540/170	*	*	*	*	*	*	*	*
BDVA 400.000	0603-20-xxxxxx	400.000	140/200-540/170	*	*	*	*	*	*	*	*
BDVA 500.000	0603-20-xxxxxx	500.000	160/190-640/170	*	*	*	*	*	*	*	*
BDVA 630.000	0603-20-xxxxxx	630.000	160/280-640/170	*	*	*	*	*	*	*	*

* on request

General characteristics:

- transformer with customized voltages up to 1000V, larger voltage on request
- cost optimized model with sheet (M330-50A)
- reduced sizes
- open design for stationary installation
- back of hand finger protected terminals, according to DGUV rule 3 (IPxxB)
- electric currents above 340A, needs electric connections on cable lugs or copper plates (IP00)
- insulation class B, max ambient temperature 40°C (ta 40°C/B) up to 3500 VA
- insulation class F, max ambient temperature 40°C (ta 40°C/F) from 4000 VA
- available in various standards
- standard: standing construction with mounting brakets
- in sizes up to 40 kVA change the measurements of high and depth from currents higher than 50A
- loss optimized models, see BDVA

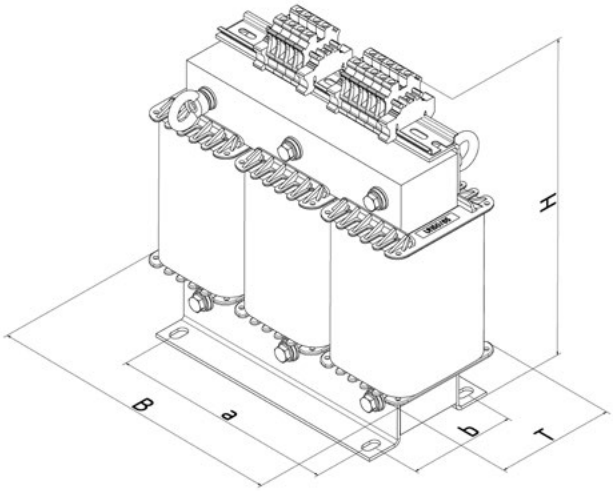

Standards:

EN 61558-2-2	Control transformers
EN 61558-2-4	Isolation transformer
EN 61558-2-6	Safety transformer
EN 61558-2-13	Auto transformers

Model	Art.-No.	Power [VA]	Size	Copper [kg]	Total [kg]	Dimensions [mm]					
						B	T	H	a	b	Screw

General characteristics:

- transformer to create a fully loadable neutral wire
- standard voltage 3AC 400V
- open design for stationary installation
- back of hand finger protected terminals, according to DGUV rule 3
- IPxxP, insulation class F, max ambient temperature 40°C (ta 40°C/F)
- loss optimized models, other powers and voltages on request

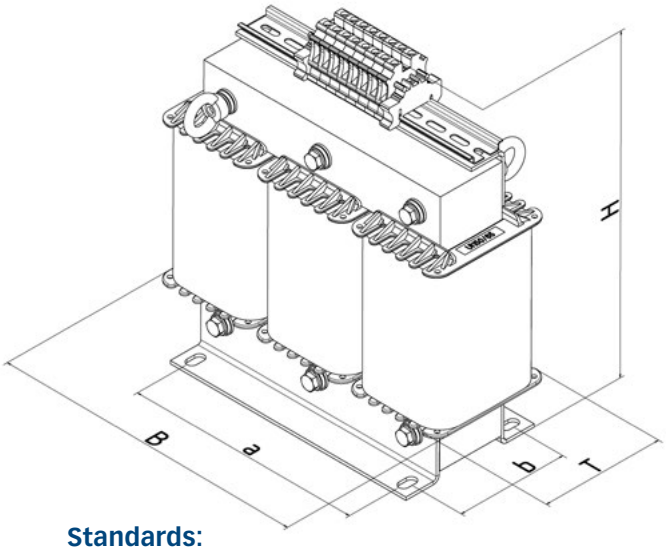

Standards:

EN 61558-2-13 Auto transformers

Model	Art.-No.	Neural wire current [A]	Power [kVA]	Size	Copper [kg]	Total [kg]	Dimensions [mm]					
							B	T	H	a	b	Screw
BNLB 10	0605-10-000010	10	7	3UI 120/41	6,90	16,0	240	111	210	185	81	M8
BNLB 16	0605-10-000016	16	11	3UI 120/71	8,70	25,0	240	141	210	185	101	M8
BNLB 20	0605-10-000020	20	14	3UI 150/52	10,6	20,0	300	140	260	224	94	M8
BNLB 25	0605-10-000025	25	17	3UI 150/65	14,5	27,0	300	153	260	224	108	M8
BNLB 32	0605-10-000032	32	22	3UI 150/77	15,3	42,0	300	165	265	224	120	M8
BNLB 40	0605-10-000040	40	28	3UI 150/92	21,3	53,0	300	180	265	224	134	M8
BNLB 50	0605-10-000050	50	35	3UI 180/63	30,4	62,0	360	165	370	264	125	M8
BNLB 63	0605-10-000063	63	43	3UI 180/78	35,0	75,0	360	180	370	264	140	M8
BNLB 80	0605-10-000080	80	55	3UI 210/73	48,0	97,0	420	180	430	316	143	M10
BNLB 100	0605-10-000100	100	70	3UI 210/88	50,0	112	420	195	430	316	158	M10
BNLB 125	0605-10-000125	125	87	3UI 210/103	53,0	125	420	210	440	316	173	M10
BNLB 160	0605-10-000160	160	110	3UI 210/133	59,0	155	420	240	450	316	203	M10
BNLB 200	0605-10-000200	200	138	3UI 240/110	76,0	180	480	240	520	356	184	M12
BNLB 250	0605-10-000250	250	173	3UI 240/140	83,0	218	480	270	530	356	214	M12

General characteristics:

- auto transformers with standard voltages for worldwide use
- various input voltages (according to the list)
- output voltage 3AC 400V
- open design for stationary installation
- back of hand finger protected terminals, according to DGUV rule 3
- IPxxB, insulation class F, max ambient temperature 40°C (ta 40°C/F)

Please check in advance whether an autotransformer is applicable!
See also the information at page 38.

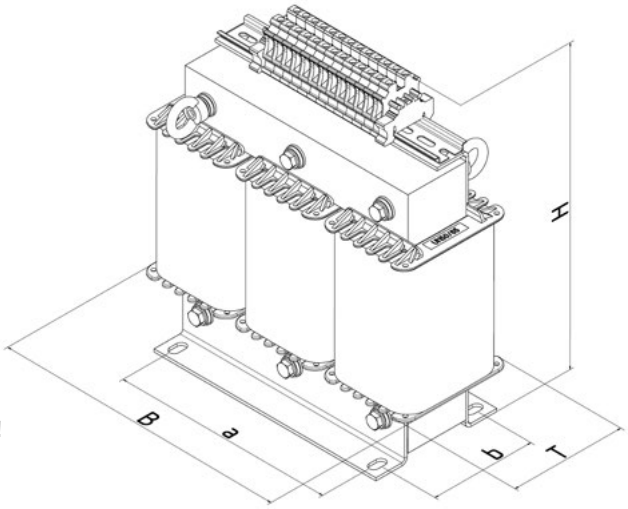

Standards:

EN 61558-2-13 Auto transformers

Input voltage: 3AC 200/208 V

Model	Art.-No.	Power [kVA]	Copper [kg]	Total [kg]	Dimensions [mm]					
					B	T	H	a	b	Screw
BDSW 2-200	0610-10-000002	2	3,40	10,2	180	111	155	136	77	M6
BDSW 3,5-200	0610-10-00003,5	3,5	5,90	14,8	228	110	195	176	71	M6
BDSW 10-200	0610-10-000010	10	9,80	38,4	300	165	260	224	120	M8
BDSW 15-200	0610-10-000015	15	18,5	53,2	336	150	290	248	127	M8
BDSW 25-200	0610-10-000025	25	31,0	84,0	420	180	360	316	143	M10
BDSW 45-200	0610-10-000045	45	43,4	150	420	240	430	316	203	M10
BDSW 70-200	0610-10-000070	70	83,4	181	480	240	490	356	184	M12
BDSW 110-200	0610-10-000110	110	116	280	600	395	550	430	212	M16
BDSW 160-200	0610-10-000160	160	129	349	600	450	550	430	262	M16
BDSW 250-200	0610-10-000250	250	195	500	660	550	710	460	284	M16

Input voltage: 3AC 220/230 V

Model	Art.-No.	Power [kVA]	Copper [kg]	Total [kg]	Dimensions [mm]					
					B	T	H	a	b	Screw
BDSW 2-220	0611-10-000002	2	3,50	10,9	180	111	155	136	77	M6
BDSW 3,5-220	0611-10-00003,5	3,5	6,30	20,2	228	134	195	176	95	M6
BDSW 10-220	0611-10-000010	10	8,80	37,3	300	165	260	224	120	M8
BDSW 15-220	0611-10-000015	15	14,50	48,8	300	180	260	224	134	M8
BDSW 25-220	0611-10-000025	25	25,90	75,0	360	195	380	264	155	M8
BDSW 45-220	0611-10-000045	45	45,90	119	420	210	430	316	173	M10
BDSW 70-220	0611-10-000070	70	69,0	171	480	240	500	356	184	M12
BDSW 110-220	0611-10-000110	110	96,0	227	600	350	550	430	182	M16
BDSW 160-220	0611-10-000160	160	129,0	349	600	450	550	430	262	M16
BDSW 250-220	0611-10-000250	250	195,0	500	660	550	710	460	284	M16

Input voltage: 3AC 240/346 V

Model	Art.-No.	Power [kVA]	Copper [kg]	Total [kg]	Dimensions [mm]					
					B	T	H	a	b	Screw
BDSW 2-240	0612-10-000002	2	2,80	8,70	180	101	155	136	67	M6
BDSW 3,5-240	0612-10-00003,5	3,5	6,80	15,5	228	110	195	176	71	M6
BDSW 10-240	0612-10-000010	10	7,20	31,6	300	153	260	224	108	M8
BDSW 15-240	0612-10-000015	15	17,3	46,4	300	165	260	224	120	M8
BDSW 25-240	0612-10-000025	25	26,0	68,0	360	180	310	264	140	M8
BDSW 45-240	0612-10-000045	45	44,2	108	420	195	440	316	158	M10
BDSW 70-240	0612-10-000070	70	59,0	154	420	240	440	316	203	M10
BDSW 110-240	0612-10-000110	110	86,5	216	480	270	500	356	214	M12
BDSW 160-240	0612-10-000160	160	116	280	600	395	550	430	212	M16
BDSW 250-240	0612-10-000250	250	184	387	660	465	710	460	244	M16

Input voltage: 3AC 380/415V

Model	Art.-No.	Power [kVA]	Copper [kg]	Total [kg]	Dimensions [mm]					
					B	T	H	a	b	Screw
BDSW 2-380	0613-10-000002	2	0,80	1,80	120	81	110	90	39	M4
BDSW 3,5-380	0613-10-00003,5	3,5	0,70	2,30	120	91	110	90	49	M4
BDSW 10-380	0613-10-000010	10	2,50	8,40	180	101	155	136	67	M6
BDSW 15-380	0613-10-000015	15	3,40	10,5	180	111	155	136	77	M6
BDSW 25-380	0613-10-000025	25	6,30	20,0	228	134	195	176	95	M6
BDSW 45-380	0613-10-000045	45	11,4	35,5	300	153	330	224	108	M8
BDSW 70-380	0613-10-000070	70	12,2	39,7	300	165	330	224	120	M8
BDSW 110-380	0613-10-000110	110	19,6	54,3	336	170	380	248	127	M8
BDSW 160-380	0613-10-000160	160	31,5	80,0	420	180	450	316	143	M10
BDSW 250-380	0613-10-000250	250	37,7	131	420	240	450	316	203	M10

Input voltage: 3AC 440/460V

Model	Art.-No.	Power [kVA]	Copper [kg]	Total [kg]	Dimensions [mm]					
					B	T	H	a	b	Screw
BDSW 2-440	0614-10-000002	2	1,10	3,90	150	86	135	113	49	M5
BDSW 3,5-440	0614-10-00003,5	3,5	1,90	6,10	150	101	135	113	64	M5
BDSW 10-440	0614-10-000010	10	4,80	13,3	228	110	195	176	71	M6
BDSW 15-440	0614-10-000015	15	6,20	19,9	228	134	195	176	95	M6
BDSW 25-440	0614-10-000025	25	7,00	28,0	265	152	230	200	102	M8
BDSW 45-440	0614-10-000045	45	12,2	40,7	300	165	340	224	120	M8
BDSW 70-440	0614-10-000070	70	20,5	62,0	360	180	390	264	140	M8
BDSW 110-440	0614-10-000110	110	35,3	126	420	240	440	316	203	M10
BDSW 160-440	0614-10-000160	160	47,1	121	420	210	440	316	173	M10
BDSW 250-440	0614-10-000250	250	74,4	176	480	240	500	356	184	M12

Input voltage: 3AC 480/500V

Model	Art.-No.	Power [kVA]	Copper [kg]	Total [kg]	Dimensions [mm]					
					B	T	H	a	b	Screw
BDSW 2-480	0615-10-000002	2	1,60	5,80	150	101	135	113	64	M5
BDSW 3,5-480	0615-10-00003,5	3,5	2,30	8,20	180	101	155	136	67	M6
BDSW 10-480	0615-10-000010	10	5,70	19,4	228	134	195	176	95	M6
BDSW 15-480	0615-10-000015	15	8,10	26,0	240	145	205	185	105	M8
BDSW 25-480	0615-10-000025	25	11,0	35,4	300	153	260	224	108	M8
BDSW 45-480	0615-10-000045	45	21,9	63,0	360	180	380	264	140	M8
BDSW 70-480	0615-10-000070	70	34,0	83,0	420	180	450	316	143	M10
BDSW 110-480	0615-10-000110	110	46,1	119	420	210	450	316	173	M10
BDSW 160-480	0615-10-000160	160	80,0	182	480	240	500	356	184	M12
BDSW 250-480	0615-10-000250	250	127	227	600	350	550	430	182	M16

Input voltage: 3AC 575/600V

Model	Art.-No.	Power [kVA]	Copper [kg]	Total [kg]	Dimensions [mm]					
					B	T	H	a	b	Screw
BDSW 2-575	0616-10-000002	2	2,80	7,20	180	91	155	136	57	M6
BDSW 3,5-575	0616-10-00003,5	3,5	4,50	13,4	228	110	195	176	71	M6
BDSW 10-575	0616-10-000010	10	6,20	27,2	265	152	230	200	102	M8
BDSW 15-575	0616-10-000015	15	10,8	34,5	300	153	260	224	108	M8
BDSW 25-575	0616-10-000025	25	19,5	54,5	336	150	290	248	127	M8
BDSW 45-575	0616-10-000045	45	38,9	87,0	180	360	440	316	143	M10
BDSW 70-575	0616-10-000070	70	44,0	139	420	240	450	316	203	M10
BDSW 110-575	0616-10-000110	110	76,7	206	480	270	500	356	214	M12
BDSW 160-575	0616-10-000160	160	116	280	600	395	550	430	212	M16
BDSW 250-575	0616-10-000250	250	174	349	600	450	550	430	262	M16

Input voltage: 3AC 690V

Model	Art.-No.	Power [kVA]	Copper [kg]	Total [kg]	Dimensions [mm]					
					B	T	H	a	b	Screw
BDSW 2-690	0617-10-000002	2	2,90	8,80	180	101	155	136	67	M6
BDSW 3,5-690	0617-10-00003,5	3,5	5,50	14,4	228	110	195	176	71	M6
BDSW 10-690	0617-10-000010	10	9,50	33,8	300	153	260	224	108	M8
BDSW 15-690	0617-10-000015	15	15,0	49,6	300	180	260	224	134	M8
BDSW 25-690	0617-10-000025	25	26,0	68,0	360	180	310	264	140	M8
BDSW 45-690	0617-10-000045	45	49,1	113	420	195	440	316	158	M10
BDSW 70-690	0617-10-000070	70	61,0	156	420	240	460	316	203	M10
BDSW 110-690	0617-10-000110	110	88,8	218	480	270	500	356	214	M12
BDSW 160-690	0617-10-000160	160	129	349	600	450	550	430	262	M16
BDSW 250-690	0617-10-000250	250	228	387	660	465	710	460	244	M16

BDMED	Three-phase isolating transformer for supply of medical rooms	3 - 10 kVA

General characteristics:

- Input voltage 3AC 400 V
- Output voltage 3AC 230 V
- energy efficiency with grain oriented sheet M165-35S
- max no load voltage AC 250V between phases
- no load current max 3% of nominal current
- short circuit voltage uk max 3%
- inrush current max 12x nominal current
- reinforced insulation and isolated shield foil between windings
- structurally insulated mounting brakets
- temperature monitoring with PTC 120°C in each coil
- shield winding with lead out insulated connection
- vector group YNyn0
- back of hand finger protected terminals, according to DGUV rule 3
- IP xx B, insulating class E, max ambient temperature 40°C (ta 40°C/E)
- vacuum insulated
- other voltages, powers or designs on request

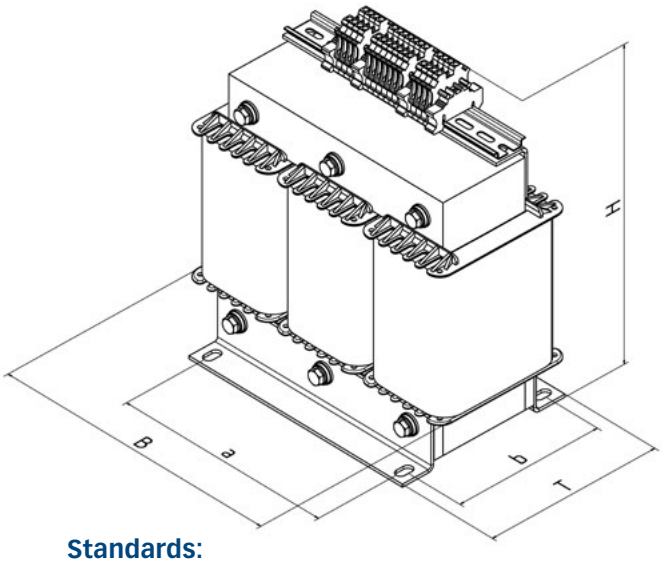

Standards:

EN 61558-2-15 Transformers for suply of medical rooms

Model	Art.-No.	Power [kVA]	Size	Copper [kg]	Total [kg]	Dimensions [mm]					
						B	T	H	a	b	Screw
BDMED 3000	0618-10-003000	3,0	3UI 150/77	15,2	45,5	300	165	330	224	140	M8
BDMED 4000	0618-10-004000	4,0	3UI 150/92	18,6	52,0	300	180	330	224	154	M8
BDMED 5000	0618-10-005000	5,0	3UI 150/103	19,7	56,0	300	191	330	224	165	M8
BDMED 6300	0618-10-006300	6,3	3UI 180/63	27,6	63,0	360	165	380	264	145	M8
BDMED 8000	0618-10-008000	8,0	3UI 210/63	37,4	85,0	420	170	430	316	153	M10
BDMED 10000	0618-10-010000	10,0	3UI 210/73	39,1	89,0	420	180	430	316	163	M10

3 | CHOKES AND FILTERS

Notes

Application form for customized chokes

Company _____

Street _____

Zip code, city _____

Contact person _____

Phone _____

Mail _____

Pieces _____

☐ Input choke (line choke)

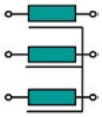

☐ DC Choke (smoothing choke)

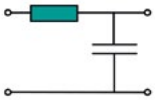

☐ Output choke (du/dt filter)

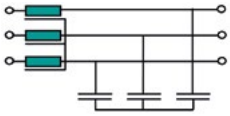

☐ Other _____

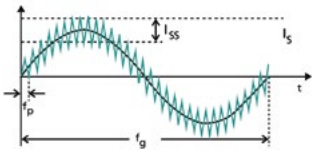

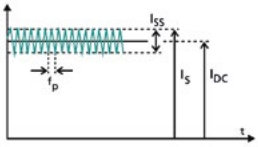

Inductance at rated current _____

Rated current [A] _____

Tolerance [%] _____

Fundamental frequency (fg) [Hz] _____

Minimum inductance at peak current [mH] _____

Peak current (Is) [A] _____

Harmonic current 1. harmonic wave (Iss1) [A] _____

Harmonic current x. harmonic wave (Issx) [A] _____

Pulse rate (fp) [kHz] _____

Rated voltage [V] _____

Duty cycle ☐ S1 / 100% ED ☐ Others _____

Temperature class ☐ ta 40°C/E ☐ ta 40°C/B ☐ ta 40°C/F ☐ Others _____

Protection class ☐ IP xx B (IP 00) ☐ IP 23 ☐ IP 54 ☐ Casting

☐ others _____

Housing color ☐ RAL 7035 ☐ RAL 7032 ☐ Others _____

Standards ☐ EN 61558 ☐ UL/CSA ☐ Others _____

Primary connection ☐ Terminals ___mm² ☐ Solder lug ☐ Free ends ☐ Others _____

Secondary connection ☐ Terminals ___mm² ☐ Solder lug ☐ Free ends ☐ Others _____

Attachment ☐ Mounting brakets ☐ Foot bar ☐ Catch spring ☐ Studs

Documentation ☐ Inspection record ☐ Data sheet ☐ Circuit diagram ☐ Serial numbers

Appointment _____

Others _____

General characteristics:

- single-phase line choke with 4% uk
- for current limiting or rejection of the circuit feedback
- nominal voltage according to model: AC 115V, 230V (277V9, 400V (480V)
- nominal frequency 50Hz, 60Hz with other voltages possible
- open design for stationary installation
- back of hand finger protected terminals, according to DGUV rule 3
- IPxxB, insulation class B, max ambient temperature 40°C (ta 40°C/B)

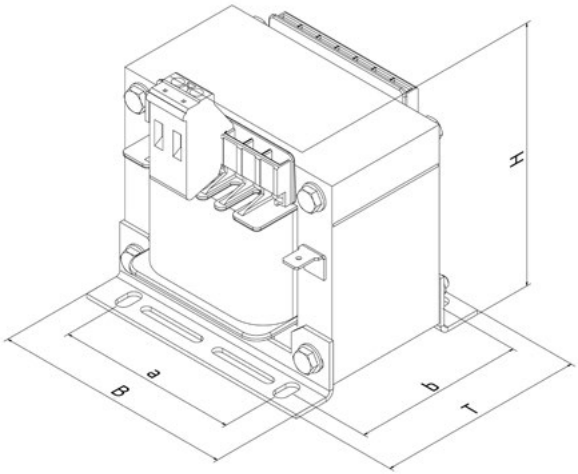

Standards:

EN 61558-2-20 Chokes

Voltage: AC 115 V

Model	Art.-No.	Current [A]	Inductance [mH]	Size	Copper [kg]	Total [kg]	Dimensions [mm]					
							B	T	H	a	b	Screw
BEND4-4-115	0700-10-000004	4	3,66	EI 48/16	0,05	0,30	46	42	52	38	31	M3
BEND4-6-115	0700-10-000006	6	2,44	EI 54/18	0,05	0,35	55	76	60	44	34	M3
BEND4-8-115	0700-10-000008	8	1,83	EI 54/18	0,08	0,36	55	76	60	44	34	M3
BEND4-10-115	0700-10-000010	10	1,46	EI 60/21	0,11	0,52	60	65	76	44	36	M3
BEND4-13-115	0700-10-000013	13	1,12	EI 60/31	0,11	0,75	60	75	76	44	46	M3
BEND4-16-115	0700-10-000016	16	0,96	EI 60/31	0,14	0,80	60	75	76	44	46	M3
BEND4-20-115	0700-10-000020	20	0,73	EI 66/34	0,13	0,95	66	78	80	50	52	M4
BEND4-25-115	0700-10-000025	25	0,58	EI 78/27	0,16	1,10	78	71	89	56	45	M4
BEND4-32-115	0700-10-000032	32	0,458	EI 78/36	0,24	1,45	78	80	89	56	54	M4

Voltage: AC 230 V (50Hz) // 277 V (60Hz)

Model	Art.-No.	Current [A]	Inductance [mH]	Size	Copper [kg]	Total [kg]	Dimensions [mm]					
							B	T	H	a	b	Screw
BEND4-2-230	0701-10-000002	2	14,6	EI 48/16	0,06	0,35	46	42	52	38	31	M3
BEND4-4-230	0701-10-000004	4	7,32	EI 54/18	0,08	0,45	55	76	60	44	34	M3
BEND4-6-230	0701-10-000006	6	4,88	EI 60/31	0,12	0,65	60	75	76	44	46	M3
BEND4-8-230	0701-10-000008	8	3,66	EI 66/23	0,16	0,90	66	67	80	50	40	M4
BEND4-10-230	0701-10-000010	10	2,93	EI 66/34	0,16	1,10	66	78	80	50	52	M4
BEND4-13-230	0701-10-000013	13	2,25	EI 78/27	0,22	1,40	78	71	89	56	45	M4
BEND4-16-230	0701-10-000016	16	1,83	EI 78/36	0,25	1,90	78	80	89	56	54	M4
BEND4-20-230	0701-10-000020	20	1,46	EI 84/29	0,31	2,00	85	68	93	64	47	M4
BEND4-25-230	0701-10-000025	25	1,17	EI 84/43	0,32	2,30	85	68	93	64	47	M4
BEND4-32-230	0701-10-000032	32	0,91	EI 84/52	0,50	2,90	85	90	93	64	69	M4

Voltage: AC 400 V (50Hz) // AC 480 V (60Hz)

Model	Art.-No.	Current [A]	Inductance [mH]	Size	Copper [kg]	Total [kg]	Dimensions [mm]					
							B	T	H	a	b	Screw
BEND4-2-400	0702-10-000002	2	25,46	EI 54/18	0,08	0,38	55	76	60	44	34	M3
BEND4-4-400	0702-10-000004	4	12,73	EI 60/31	0,14	0,75	60	75	76	44	46	M3
BEND4-6-400	0702-10-000006	6	8,48	EI 66/34	0,16	0,95	66	78	80	50	52	M4
BEND4-8-400	0702-10-000008	8	6,36	EI 78/27	0,22	1,20	78	71	89	56	45	M4
BEND4-10-400	0702-10-000010	10	5,09	EI 78/36	0,26	1,50	78	80	89	56	54	M4
BEND4-13-400	0702-10-000013	13	3,91	EI 84/43	0,28	1,90	85	68	93	64	47	M4
BEND4-16-400	0702-10-000016	16	3,18	EI 84/43	0,41	2,20	85	68	93	64	47	M4
BEND4-20-400	0702-10-000020	20	2,54	EI 96/35	0,63	2,50	96	78	104	84	60	M5
BEND4-25-400	0702-10-000025	25	2,03	EI 96/45	0,68	3,00	96	88	104	84	70	M5
BEND4-32-400	0702-10-000032	32	1,59	EI 96/59	0,77	3,70	96	102	104	84	84	M5

General characteristics:

- Single-phase line choke with 6% uk
- for current limiting or rejection of the circuit feedback
- nominal voltage according to model: AC 115 V, AC 230V (277V)
- nominal frequency 50Hz, 60Hz with other voltages possible
- open design for stationary installation
- back of hand finger protected terminals, according to DGUV rule 3
- IP xx B, isolating class B, max ambient temperature 40°C (ta 40°C/B)

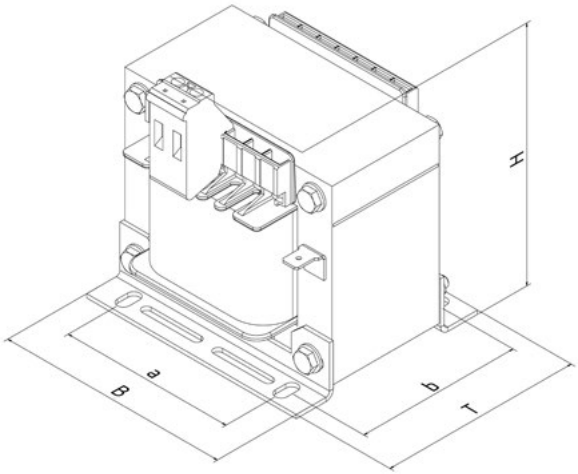

Standards:

EN 61558-2-20 Chokes

Voltage: AC 115 V

Model	Art.-No.	Current [A]	Inductance [mH]	Size	Copper [kg]	Total [kg]	Dimensions [mm]					
							B	T	H	a	b	Screw
BEND6-4-115	0703-10-000004	4	5,49	EI 54/18	0,07	0,35	55	76	60	44	34	M3
BEND6-6-115	0703-10-000006	6	3,66	EI 60/21	0,10	0,50	60	65	76	44	36	M3
BEND6-8-115	0703-10-000008	8	2,74	EI 60/31	0,12	0,70	60	75	76	44	46	M3
BEND6-10-115	0703-10-000010	10	2,19	EI 66/23	0,15	0,70	66	67	80	50	40	M4
BEND6-13-115	0703-10-000013	13	1,69	EI 66/34	0,18	1,00	66	78	80	50	52	M4
BEND6-16-115	0703-10-000016	16	1,37	EI 78/27	0,21	1,10	78	71	89	56	45	M4
BEND6-20-115	0703-10-000020	20	1,09	EI 78/36	0,23	1,50	78	80	89	56	54	M4
BEND6-25-115	0703-10-000025	25	0,87	EI 84/43	0,26	1,90	85	68	93	64	47	M4
BEND6-32-115	0703-10-000032	32	0,68	EI 84/43	0,34	2,00	85	68	93	64	47	M4

Voltage: AC 230 V (50Hz) // 277 V (60Hz)

Model	Art.-No.	Current [A]	Inductance [mH]	Size	Copper [kg]	Total [kg]	Dimensions [mm]					
							B	T	H	a	b	Screw
BEND6-2-230	0704-10-000002	2	21,69	EI 54/18	0,06	0,40	55	76	60	44	34	M3
BEND6-4-230	0704-10-000004	4	10,98	EI 60/31	0,10	0,70	60	75	76	44	46	M3
BEND6-6-230	0704-10-000006	6	7,32	EI 66/34	0,12	1,00	66	78	80	50	52	M4
BEND6-8-230	0704-10-000008	8	5,49	EI 66/34	0,25	1,10	66	78	80	50	52	M4
BEND6-10-230	0704-10-000010	10	4,39	EI 78/27	0,26	1,30	78	71	89	56	45	M4
BEND6-13-230	0704-10-000013	13	3,37	EI 78/36	0,33	1,50	78	80	89	56	54	M4
BEND6-16-230	0704-10-000016	16	2,74	EI 84/43	0,28	1,90	85	68	93	64	47	M4
BEND6-20-230	0704-10-000020	20	2,19	EI 84/52	0,41	2,40	85	90	93	64	69	M4
BEND6-25-230	0704-10-000025	25	1,75	EI 96/45	0,52	2,90	96	88	104	84	70	M5
BEND6-32-230	0704-10-000032	32	1,37	EI 96/59	0,57	3,50	96	102	104	84	84	M5

General characteristics:

- Single-phase line dual chokes with 4% uk
- for current limiting or rejection of the circuit feedback
- nominal voltage according to model: AC 115 V, AC 230V (277V), AC 400V (480V)
- nominal frequency 50Hz, 60Hz with other voltages possible
- open design for stationary installation
- back of hand finger protected terminals, according to DGUV rule 3
- IP xx B, isolating class B, max ambient temperature 40°C (ta 40°C/B)

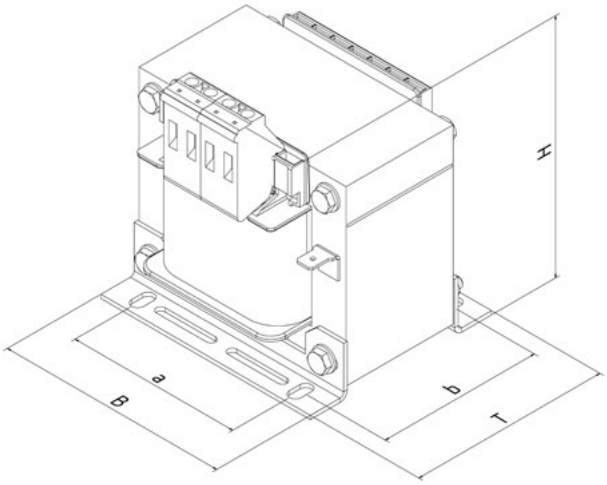

Standards:

EN 61558-2-20 Chokes

Voltage: AC 115 V

Model	Art.-No.	Current [A]	Inductance [mH]	Size	Copper [kg]	Total [kg]	Dimensions [mm]					
							B	T	H	a	b	Screw
BENDD4-2-115	0705-10-000002	2	3,66	EI 48/16	0,05	0,30	46	42	52	38	31	M3
BENDD4-4-115	0705-10-000004	4	1,83	EI 60/21	0,07	0,52	60	65	76	44	36	M3
BENDD4-6-115	0705-10-000006	6	1,22	EI 60/31	0,15	0,80	60	75	76	44	46	M3
BENDD4-8-115	0705-10-000008	8	0,915	EI 66/23	0,15	0,90	66	67	80	50	40	M4
BENDD4-10-115	0705-10-000010	10	0,732	EI 66/34	0,18	1,10	66	78	80	50	52	M4
BENDD4-13-115	0705-10-000013	13	0,563	EI 78/27	0,23	1,20	78	71	89	56	45	M4
BENDD4-16-115	0705-10-000016	16	0,457	EI 78/36	0,27	1,50	78	80	89	56	54	M4
BENDD4-20-115	0705-10-000020	20	0,366	EI 84/29	0,42	2,00	85	68	93	64	47	M4
BENDD4-25-115	0705-10-000025	25	0,293	EI 84/43	0,42	1,90	85	68	93	64	47	M4
BENDD4-32-115	0705-10-000032	32	0,229	EI 96/35	0,49	2,50	96	78	104	84	60	M5

Voltage: AC 230 V (50Hz) // 277 V (60Hz)

Model	Art.-No.	Current [A]	Inductance [mH]	Size	Copper [kg]	Total [kg]	Dimensions [mm]					
							B	T	H	a	b	Screw
BENDD4-2-230	0706-10-000002	2	7,32	EI 54/18	0,09	0,40	55	76	60	44	34	M3
BENDD4-4-230	0706-10-000004	4	3,66	EI 60/31	0,14	0,80	60	75	76	44	46	M3
BENDD4-6-230	0706-10-000006	6	2,44	EI 78/27	0,20	1,20	78	71	89	56	45	M4
BENDD4-8-230	0706-10-000008	8	1,83	EI 78/36	0,23	1,50	78	80	89	56	54	M4
BENDD4-10-230	0706-10-000010	10	1,46	EI 84/43	0,21	1,90	85	68	93	64	47	M4
BENDD4-13-230	0706-10-000013	13	1,12	EI 84/43	0,35	2,00	85	68	93	64	47	M4
BENDD4-16-230	0706-10-000016	16	0,91	EI 84/52	0,47	2,40	85	90	93	64	69	M4
BENDD4-20-230	0706-10-000020	20	0,73	EI 96/45	0,58	2,80	96	88	104	84	70	M5
BENDD4-25-230	0706-10-000025	25	0,58	EI 96/59	0,74	3,70	96	102	104	84	84	M5
BENDD4-32-230	0706-10-000032	32	0,45	EI 105/60	0,86	4,40	105	104	110	84	85	M5

Voltage: AC 400 V (50Hz) // AC 480 V (60Hz)

Model	Art.-No.	Current [A]	Inductance [mH]	Size	Copper [kg]	Total [kg]	Dimensions [mm]					
							B	T	H	a	b	Screw
BENDD4-2-400	0707-10-000002	2	12,73	EI 60/31	0,12	0,80	60	75	76	44	46	M3
BENDD4-4-400	0707-10-000004	4	6,36	EI 78/27	0,25	1,20	78	71	89	56	45	M4
BENDD4-6-400	0707-10-000006	6	4,24	EI 84/29	0,39	2,00	85	54	93	64	47	M4
BENDD4-8-400	0707-10-000008	8	3,18	EI 84/43	0,29	2,10	85	68	93	64	47	M4
BENDD4-10-400	0707-10-000010	10	2,54	EI 96/45	0,42	2,80	96	88	104	84	70	M5
BENDD4-13-400	0707-10-000013	13	1,96	EI 96/59	0,36	3,70	96	102	104	84	84	M5
BENDD4-16-400	0707-10-000016	16	1,59	EI 105/45	0,63	3,70	105	88	110	84	69	M5
BENDD4-20-400	0707-10-000020	20	1,27	EI 105/60	0,81	4,40	105	104	110	84	85	M5
BENDD4-25-400	0707-10-000025	25	1,02	EI 120/53	1,05	5,40	120	100	120	90	82	M5
BENDD4-32-400	0707-10-000032	32	0,79	EI 120/61	1,47	6,20	120	108	120	90	90	M5

General characteristics:

- Single-phase line dual chokes with 6% uk
- for current limiting or rejection of the circuit feedback
- nominal voltage according to model: AC 115 V, AC 230V (277V)
- nominal frequency 50Hz, 60Hz with other voltages possible
- open design for stationary installation
- back of hand finger protected terminals, according to DGUV rule 3
- IP xx B, isolating class B, max ambient temperature 40°C (ta 40°C/B)

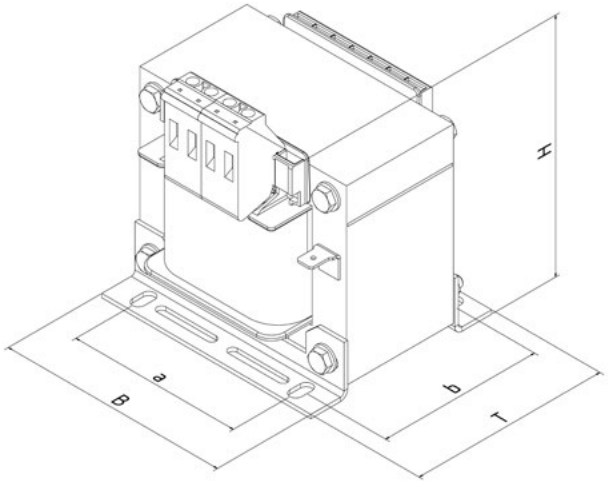

Standards:

EN 61558-2-20 Chokes

Voltage AC 115 V

Model	Art.-No.	Current [A]	Inductance [mH]	Size	Copper [kg]	Total [kg]	Dimensions [mm]					
							B	T	H	a	b	Screw
BENDD6-2-115	0708-10-000002	2	5,49	EI 54/18	0,08	0,40	55	76	60	44	34	M3
BENDD6-4-115	0708-10-000004	4	2,74	EI 60/31	0,10	0,80	60	75	76	44	46	M3
BENDD6-6-115	0708-10-000006	6	1,83	EI 66/34	0,19	1,10	66	78	80	50	52	M4
BENDD6-8-115	0708-10-000008	8	1,37	EI 78/27	0,20	1,20	78	71	89	56	45	M4
BENDD6-10-115	0708-10-000010	10	1,10	EI 78/36	0,29	1,50	78	80	89	56	54	M4
BENDD6-13-115	0708-10-000013	13	0,84	EI 84/43	0,28	1,90	85	68	93	64	47	M4
BENDD6-16-115	0708-10-000016	16	0,68	EI 84/43	0,31	2,00	85	68	93	64	47	M4
BENDD6-20-115	0708-10-000020	20	0,55	EI 96/35	0,52	2,50	96	78	104	84	60	M5
BENDD6-25-115	0708-10-000025	25	0,44	EI 96/45	0,46	2,80	96	88	104	84	70	M5
BENDD6-32-115	0708-10-000032	32	0,34	EI 96/59	0,80	3,70	96	102	104	84	84	M5

Voltage AC 230 V (50Hz) // 277 V (60Hz)

Model	Art.-No.	Current [A]	Inductance [mH]	Size	Copper [kg]	Total [kg]	Dimensions [mm]					
							B	T	H	a	b	Screw
BENDD6-2-230	0709-10-000002	2	10,98	EI 66/23	0,12	0,90	66	67	80	50	40	M4
BENDD6-4-230	0709-10-000004	4	5,49	EI 66/34	0,22	1,10	66	78	80	50	52	M4
BENDD6-6-230	0709-10-000006	6	3,66	EI 78/36	0,30	1,50	78	80	89	56	54	M4
BENDD6-8-230	0709-10-000008	8	2,74	EI 84/43	0,32	1,90	85	68	93	64	47	M4
BENDD6-10-230	0709-10-000010	10	2,19	EI 96/35	0,41	2,50	96	78	104	84	60	M5
BENDD6-13-230	0709-10-000013	13	1,67	EI 96/45	0,52	2,80	96	88	104	84	70	M5
BENDD6-16-230	0709-10-000016	16	1,37	EI 96/59	0,65	3,70	96	102	104	84	84	M5
BENDD6-20-230	0709-10-000020	20	1,10	EI 105/45	1,00	3,70	105	88	110	84	69	M5
BENDD6-25-230	0709-10-000025	25	0,88	EI 105/60	0,94	4,40	105	104	110	84	85	M5
BENDD6-32-230	0709-10-000032	32	0,68	EI 120/53	1,38	5,40	120	100	120	90	82	M5

General characteristics:

- single-phase filter chokes 5,5%
- resonant frequency 214 Hz
- voltage AC 230 V
- IP 64, isolation class B, max ambient temperature 40°C (ta 40°C/B)
- potted in plastic housing
- with connection cable 25cm long
- optional available with capacitor

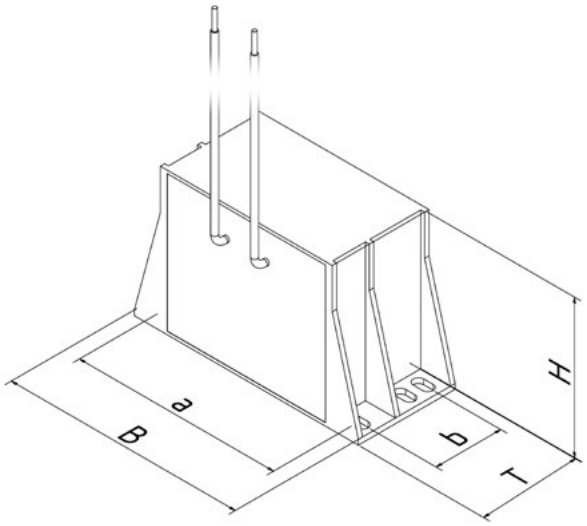

Standards:

EN 61558-2-20 Chokes

Model	Art.-No.	Capacitor		Voltage [V]	Copper [kg]	Total [kg]	Dimensions [mm]					
		µF	VAR				B	T	H	a	b	Screw
BEFD5,5/8	0710-10-000008	8	122	230	0,02	0,14	65	33	38	55	17,8	M3
BEFD5,5/10	0710-10-000010	10	152	230	0,02	0,14	65	33	38	55	17,8	M3
BEFD5,5/12	0710-10-000012	12	182	230	0,02	0,14	65	33	38	55	17,8	M3
BEFD5,5/16	0710-10-000016	16	243	230	0,02	0,21	75	39	43	62	12	M3
BEFD5,5/18	0710-10-000018	18	274	230	0,02	0,21	75	39	43	62	12	M3
BEFD5,5/20	0710-10-000020	20	304	230	0,04	0,23	75	39	43	62	12	M3
BEFD5,5/25	0710-10-000025	25	380	230	0,05	0,24	75	39	43	62	12	M3
BEFD5,5/30	0710-10-000030	30	456	230	0,05	0,32	83	43	49	68	17	M3
BEFD5,5/32	0710-10-000032	32	486	230	0,05	0,32	83	43	49	68	17	M3
BEFD5,5/40	0710-10-000040	40	608	230	0,08	0,38	83	43	49	68	17	M3
BEFD5,5/45	0710-10-000045	45	684	230	0,08	0,45	88	48	54	75	13,6	M4
BEFD5,5/50	0710-10-000050	50	760	230	0,08	0,45	88	48	54	75	13,6	M4
BEFD5,5/60	0710-10-000060	60	910	230	0,12	0,49	88	48	54	75	13,6	M4
BEFD5,5/90	0710-10-000090	90	1370	230	0,15	0,65	94	50	59	82	13	M4
BEFD5,5/37	0710-10-000037	37	1670	400	0,16	0,79	94	57	59	82	13,4	M4
BEFD5,5/74	0710-10-000074	74	3460	400	0,35	1,43	113	60	72	97	32,5	M5

General characteristics:

- three-phase filter chokes
- voltage drop 7%
- resonant frequency 189 Hz
- nominal voltage 3AC 400V - 50Hz
- max thermal current 1,22x nominal current
- linearity 1,8x nominal current
- open design for stationary installation
- back of hand finger protected terminals, according to DGUV rule 3
- IP xx B, isolating class B, max ambient temperature 40°C

(ta 40°C/B)

- optional available with capacitor
- other voltages, powers or resonant frequencies on request

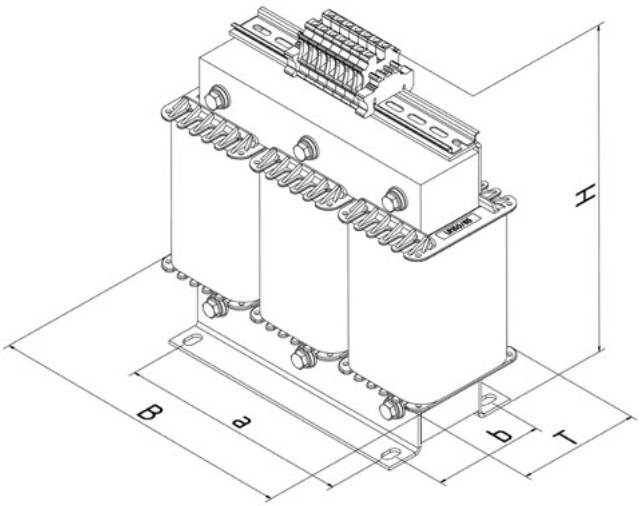

Standards:

EN 61558-2-20 Chokes

Model	Art.-No.	Current [A]	Power [kVAr]	Induc-tance [mH]	Capacity [µF]	Size	Copper [kg]	Total [kg]	Dimensions [mm]					
									B	T	H	a	b	screw
BDFD7-2,5	0718-10-000002	3,90	2,50	14,20	3x 16,6	3UI 75/26	0,40	3,40	150	86	135	113	49	M5
BDFD7-3,1	0718-10-000003	4,70	3,10	11,90	3x 19,9	3UI 75/26	0,51	3,50	150	86	135	113	49	M5
BDFD7-5	0718-10-000005	7,80	5,00	7,12	3x 33,2	3UI 75/26	1,13	4,10	150	86	135	113	49	M5
BDFD7-6,3	0718-10-000006	9,70	6,30	5,70	3x 41,5	3UI 75/41	0,81	5,10	150	101	135	113	64	M5
BDFD7-7,5	0718-10-000007	11,6	7,50	4,76	3x 49,7	3UI 75/41	1,17	5,40	150	101	135	113	64	M5
BDFD7-10	0718-10-000010	15,5	10,0	3,55	3x 66,3	3UI 90/41	1,43	7,80	180	101	155	136	67	M6
BDFD7-12,5	0718-10-000012	18,0	12,5	3,07	3x 77,1	3UI 90/41	2,13	8,60	180	101	155	136	67	M6
BDFD7-15	0718-10-000015	23,3	15,0	2,37	3x 99,5	3UI 90/51	2,81	10,1	180	111	155	136	77	M6
BDFD7-16,7	0718-10-000016	24,1	16,7	2,30	3x 102,9	3UI 90/51	2,81	10,1	180	111	155	136	77	M6
BDFD7-20	0718-10-000020	31,0	20,0	1,78	3x 132,6	3UI 114/64	2,42	15,5	228	134	195	176	95	M6
BDFD7-25	0718-10-000025	36,1	25,0	1,53	3x 154,2	3UI 114/64	3,22	16,3	228	134	260	176	95	M6
BDFD7-30	0718-10-000030	46,6	30,0	1,18	3x 198,9	3UI 120/71	4,11	21,1	240	141	270	185	101	M8
BDFD7-33,3	0718-10-000033	48,2	33,3	1,15	3x 205,8	3UI 120/71	4,11	21,1	240	141	270	185	101	M8
BDFD7-37,5	0718-10-000037	54,3	37,5	1,02	3x 213,9	3UI 132/72	4,08	26,3	265	152	300	200	102	M8
BDFD7-40	0718-10-000040	58,2	40,0	0,95	3x 248,8	3UI 132/72	5,45	27,8	265	152	300	200	102	M8
BDFD7-50	0718-10-000050	72,2	50,0	0,77	3x 308,4	3UI 150/77	5,19	35,3	300	165	320	224	120	M8

General characteristics:

- three-phase filter chokes
- voltage drop 14%
- resonant frequency 134 Hz
- nominal voltage 3AC 400V - 50Hz
- max thermal current 1,15x nominal current
- open design for stationary installation
- back of hand finger protected terminals, according to DGUV rule 3
- IP xx B, isolating class B, max ambient temperature 40°C (ta 40°C/B)
- optional available with capacitor
- other voltages, powers or resonant frequencies on request

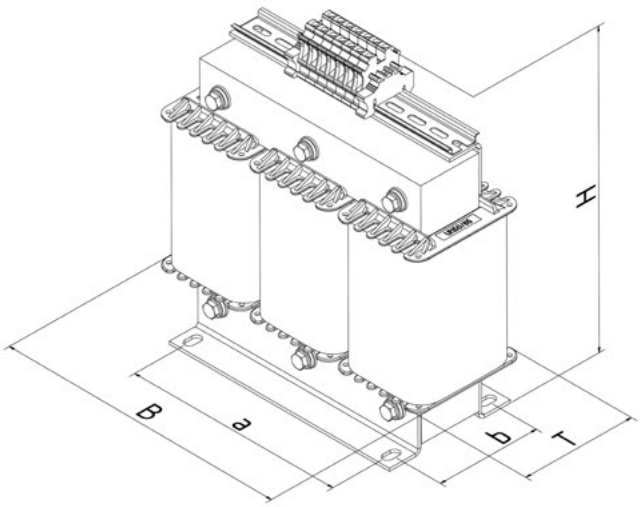

Standards:

EN 61558-2-20 Chokes

Model	Art.-No.	Current [A]	Power [kVAr]	Induc-tance [mH]	Capacity [µF]	Size	Copper [kg]	Total [kg]	Dimensions [mm]					
									B	T	H	a	b	screw
BDFD14-3,1	0719-10-000003	4,20	3,10	28,3	3x 16,6	3UI 75/41	0,78	5,10	150	101	135	113	64	M5
BDFD14-6,3	0719-10-000006	9,10	6,30	13,1	3x 35,9	3UI 90/41	2,22	8,10	180	101	155	136	67	M6
BDFD14-7,5	0719-10-000007	11,0	7,50	10,8	3x 43,4	3UI 90/51	2,83	10,2	180	111	155	136	77	M6
BDFD14-10	0719-10-000010	15,1	10,0	7,86	3x 59,8	3UI 114/40	3,61	12,5	228	110	195	176	71	M6
BDFD14-12,5	0719-10-000012	18,1	12,5	6,59	3x 71,4	3UI 114/40	5,18	14,0	228	110	195	176	71	M6
BDFD14-15	0719-10-000015	22,7	15,0	5,25	3x 89,6	3UI 114/64	4,66	18,0	228	134	195	176	95	M6
BDFD14-16,7	0719-10-000016	24,2	16,7	4,91	3x 95,8	3UI 120/61	4,33	21,0	240	131	205	175	101	M8
BDFD14-20	0719-10-000020	28,6	20,0	4,16	3x 113,1	3UI 120/61	6,88	23,5	240	131	205	175	101	M8
BDFD14-25	0719-10-000025	36,1	25,0	3,29	3x 142,8	3UI 132/72	7,40	29,0	265	152	230	200	102	M8
BDFD14-30	0719-10-000030	44,1	30,0	2,70	3x 174,3	3UI 132/72	10,4	32,0	265	152	230	200	102	M8
BDFD14-33,3	0719-10-000033	48,2	33,3	2,47	3x 190,7	3UI 132/72	11,9	33,5	265	152	300	200	102	M8
BDFD14-37,5	0719-10-000037	54,2	37,5	2,20	3x 214,2	3UI 150/77	10,9	40,5	300	165	330	224	120	M8
BDFD14-40	0719-10-000040	58,8	40,0	2,02	3x 232,4	3UI 150/77	12,3	42,0	300	165	330	224	120	M8
BDFD14-50	0719-10-000050	71,9	50,0	1,60	3x 285,6	3UI 150/92	15,4	45,5	300	180	330	224	134	M8

General characteristics:

- three-phase line choke with 2% uk
- for current limiting or rejection of the circuit feedback
- nominal voltage 3AC 400 V (3AC 480V)
- nominal frequency 50Hz
- open design for stationary installation
- back of hand finger protected terminals, according to DGUV rule 3
- from 400A connection to cable lugs
- IPxxP, insulation class F, max ambient temperature 40°C (ta 40°C/F)
- other currents and voltages on request

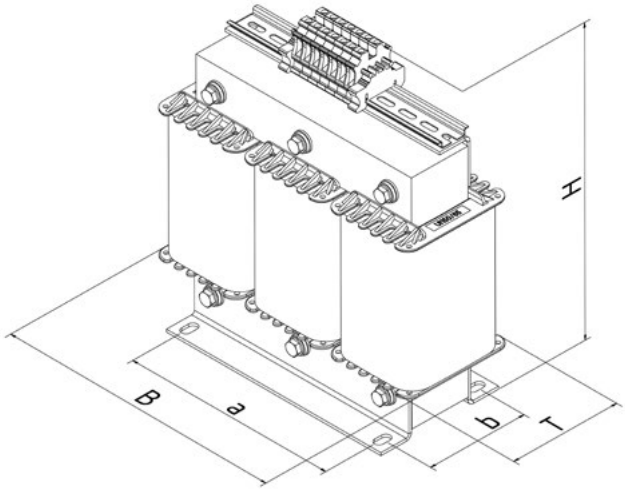

Standards:

EN 61558-2-20 Chokes

Voltage 3AC 400 V (50Hz) // 3AC 480 V (60Hz)

Model	Art.-No.	Current [A]	Inductance [mH]	Size	Copper [kg]	Total [kg]	Dimensions [mm]					
							B	T	H	a	b	Screw
BDND4-2	0720-10-000002	2	14,64	3UI 48/26	0,05	1,30	96	86	100	71	48	M4
BDND4-4	0720-10-000004	4	7,32	3UI 48/26	0,15	1,40	96	86	100	71	48	M4
BDND4-6	0720-10-000006	6	4,88	3UI 48/26	0,34	1,50	96	86	100	71	48	M4
BDND4-8	0720-10-000008	8	3,66	3UI 60/21	0,50	1,50	120	81	110	90	39	M4
BDND4-10	0720-10-000010	10	2,93	3UI 60/21	0,70	1,70	120	81	110	90	39	M4
BDND4-13	0720-10-000013	13	2,25	3UI 60/31	0,62	2,30	120	91	110	90	49	M4
BDND4-16	0720-10-000016	16	1,83	3UI 75/26	0,80	3,60	150	86	135	113	49	M5
BDND4-20	0720-10-000020	20	1,46	3UI 75/26	1,05	3,80	150	86	135	113	49	M5
BDND4-25	0720-10-000025	25	1,17	3UI 75/41	0,92	5,10	150	101	135	113	64	M5
BDND4-32	0720-10-000032	32	0,92	3UI 75/41	1,45	5,60	150	101	135	113	64	M5
BDND4-40	0720-10-000040	40	0,73	3UI 90/41	1,46	8,00	180	101	155	136	67	M6
BDND4-50	0720-10-000050	50	0,59	3UI 90/41	2,24	8,80	180	101	155	136	67	M6
BDND4-63	0720-10-000063	63	0,46	3UI 90/51	2,90	10,2	180	111	220	136	77	M6
BDND4-80	0720-10-000080	80	0,37	3UI 114/40	3,50	12,5	228	110	260	176	71	M6
BDND4-100	0720-10-000100	100	0,29	3UI 114/64	2,95	15,3	228	134	260	176	95	M6
BDND4-125	0720-10-000125	125	0,23	3UI 114/64	5,10	17,5	228	134	260	176	95	M6
BDND4-160	0720-10-000160	160	0,18	3UI 120/61	5,95	22,3	240	131	280	185	101	M8
BDND4-200	0720-10-000200	200	0,15	3UI 132/72	5,60	28,0	265	152	300	200	102	M8
BDND4-250	0720-10-000250	250	0,12	3UI 150/77	6,70	39,0	300	165	330	224	120	M8
BDND4-315	0720-10-000315	315	0,093	3UI 150/77	11,5	43,0	300	165	330	224	120	M8
BDND4-400	0720-10-000400	400	0,073	3UI 168/92	10,2	52,0	336	250	290	248	144	M8
BDND4-500	0720-10-000500	500	0,059	3UI 168/92	15,3	57,0	336	250	290	248	144	M8

General characteristics:

- three-phase line choke with 4% uk
- for current limiting or rejection of the circuit feedback
- nominal voltage 3AC 400 V (3AC 480V)
- nominal frequency 50Hz
- open design for stationary installation
- back of hand finger protected terminals, according to DGUV rule 3
- from 400A connection to cable lugs
- IPxxB, insulation class F, max ambient temperature 40°C (ta 40°C/F)
- other currents and voltages on request

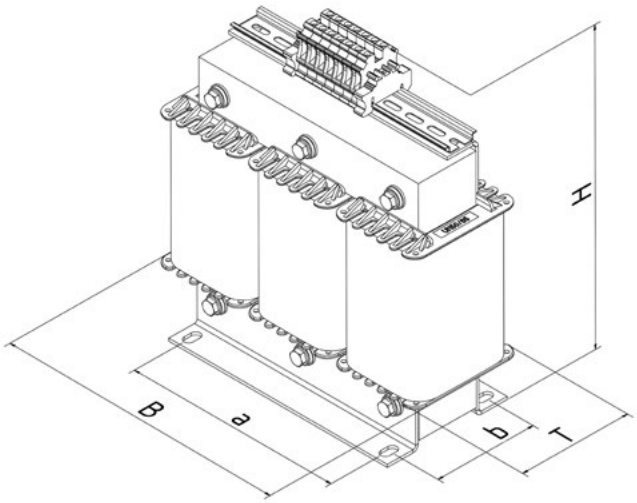

Standards:

EN 61558-2-20 Chokes

Voltage 3AC 400 V (50Hz) // 3AC 480 V (60Hz)

Model	Art.-No.	Current [A]	Inductance [mH]	Size	Copper [kg]	Total [kg]	Dimensions [mm]					
							B	T	H	a	b	Screw
BDND6-2	0721-10-000002	2	21,96	3UI 48/26	0,10	1,30	96	86	100	71	48	M4
BDND6-4	0721-10-000004	4	10,98	3UI 48/26	0,33	1,50	96	86	100	71	48	M4
BDND6-6	0721-10-000006	6	7,32	3UI 60/21	0,56	1,50	120	81	110	90	39	M4
BDND6-8	0721-10-000008	8	5,49	3UI 60/21	0,90	1,90	120	81	110	90	39	M4
BDND6-10	0721-10-000010	10	4,39	3UI 60/31	0,83	2,30	120	91	110	90	49	M4
BDND6-13	0721-10-000013	13	3,38	3UI 75/26	1,17	3,60	150	86	135	113	49	M5
BDND6-16	0721-10-000016	16	2,75	3UI 75/26	1,57	4,00	150	86	135	113	49	M5
BDND6-20	0721-10-000020	20	2,20	3UI 75/41	1,37	5,10	150	101	135	113	64	M5
BDND6-25	0721-10-000025	25	1,76	3UI 90/31	1,87	6,40	180	91	155	136	57	M6
BDND6-32	0721-10-000032	32	1,37	3UI 90/41	2,28	8,00	180	101	155	136	67	M6
BDND6-40	0721-10-000040	40	1,10	3UI 90/41	3,40	9,20	180	101	155	136	67	M6
BDND6-50	0721-10-000050	50	0,878	3UI 90/51	3,84	10,2	180	111	220	136	77	M6
BDND6-63	0721-10-000063	63	0,697	3UI 114/64	3,37	15,3	228	134	260	176	95	M6
BDND6-80	0721-10-000080	80	0,549	3UI 114/64	5,14	17,0	228	134	260	176	95	M6
BDND6-100	0721-10-000100	100	0,439	3UI 114/64	6,93	18,5	228	134	260	176	95	M6
BDND6-125	0721-10-000125	125	0,351	3UI 120/71	7,07	24,3	240	141	280	185	101	M8
BDND6-160	0721-10-000160	160	0,274	3UI 150/77	5,81	39,0	300	165	330	224	120	M8
BDND6-200	0721-10-000200	200	0,219	3UI 150/77	8,84	42,0	300	165	330	224	120	M8
BDND6-250	0721-10-000250	250	0,176	3UI 168/92	10,0	52,0	336	250	290	248	144	M8
BDND6-315	0721-10-000315	315	0,139	3UI 168/92	13,2	55,0	336	250	290	248	144	M8
BDND6-400	0721-10-000400	400	0,109	3UI 210/103	14,5	88,0	420	280	360	316	173	M10
BDND6-500	0721-10-000500	500	0,088	3UI 210/133	14,1	109,0	420	310	360	316	203	M10

4 | VARIABLE TOROIDAL TRANSFORMERS

Generals

There where AC voltages and currents between 0 and 100 % of the nominal value are needed, variable transformers are used.

The production of our toroidal transformers in accordance with EN 61558-2-14:
Particular requirements and tests for control transformers and power supply units that contain variable transformers.

Mounting and cooling

When installed in housing must be noted that the natural ventilation is not impeded. Even at rating excessive heating may destroy the transformer.
At excess of the ambient temperature of 40 ° C , the rated current has to be reduced respectively 20% per 10 ° C increase in temperature.
Especially, when used as a built-in transformers all relevant safety regulations (VDE , EN , IEC , equipment protection , etc.) have to be observed. This is part of our warranty conditions and must be detected by the user in case of damage.

Connection and overload protection

For three-phase variable toroidal transformers with star connection the neutral point is brought out in isolation. Is not allowed to form an artificial neutral point. The Input side of the overload protection device can't protect a variable toroidal transformer, because of the variable gear ratio. In addition, the inrush current of the transformer has to be considered. At the beginning it can do 20 to 30 times more than rated current and is disappears within some milliseconds.

Variable transformers can only be arranged by one, in the output circuit attuned to the rated current of the transformer overload protection. This is the only way to protect a variable transformer. The tripping characteristic of the protective device has to be noticed.

Circuits

As a standard circuit, the economy circuit has proven, i.e. that is a conducting connection between input and output circuit. On the network side existing protection measures, such as. Line protection system , grounding and fault protection circuit will not be affected. Unit design frame, chassis or housing can be included directly into the existing protection system.

For networks without neutral conductor , special versions are available on request. Also, variable transformers with galvanic isolation are available.

Maintenance

The maintenance has to be completed, depending on load at regular intervals, but at at least every 12 months, as follows:

- visual inspection of all mechanical and electrical parts
- inspection of the connections for tightness
- remove dust deposition of the winding by using a brush or compressed air
- cleaning the contact path possibly anticipated by a polishing abrasive pad , then with a soft lint-free cloth soaked in isopropyl alcohol. Do not use mechanical abrasives.
- Check carbon rollers and storage for smooth operation and impression. Note: The storage of carbon rollers must not be lubricated.

Warning!

Touching the electrical parts may be fatal! Before starting the maintenance work, electrical parts must necessarily be unlocked!

Application form for voltage stabilizer (page 1)

Company _____

Street _____

Zip code, city _____

Contact person _____

Phone _____

Mail _____

Pieces _____

☐ Single-phase voltage stabilizer ☐ Three-phase voltage stabilizer (single-phase regulation)

☐ Three-phase voltage stabilizer (master phase regulation)

Power _____

Input voltage _____

Neutral wire at input side available ☐ yes ☐ no

Tolerance (positive) ☐ +5% ☐ +10% ☐ +15% ☐ +20%

☐ maximum voltage _____ ☐ others _____ _____

Tolerance (negative) ☐ -5% ☐ -10% ☐ -15% ☐ -20%

☐ minimum voltage _____ ☐ others _____ _____

Output voltage _____

Galvanic isolation ☐ yes ☐ no

Executed neutral wire ☐ yes ☐ no

Tolerance ☐ +/- 1% ☐ +/- 5% ☐ others _____ _____

Output current _____

Frequency ☐ 50/60 Hz ☐ 60 Hz ☐ others_____

Protection class ☐ IP 23 ☐ IP 54 ☐ others_____

Application form for voltage stabilizer (page 2)

Connection input	☐ Terminals _____ mm²	☐ Others _____ _____
Connection output	☐ Terminals _____ mm²	☐ Others _____ _____
Accessories	☐ Fuse input	☐ Fuse output
	☐ Main switch	☐ Bypass
	☐ Voltmeter (analog at output)	☐ Voltmeter (digital at output)
	☐ Amperemeter (analog at output)	☐ Amperemeter (digital at output)
	☐ Others _____	☐ Others _____ _____
Documentation	☐ Test report ☐ Circuit diagram	☐ Data sheet
Appointment	_____	
Others	_____	
	_____	

General characteristics:

- single-phase variable toroidal auto transformer
- compact design
- three point mounting in 3x120° angle
- open design for stationary installation
- IPxxP, insulation class B, max ambient temperature 40°C (ta 40°C/B)
- manual drive (knob and scale order separately)

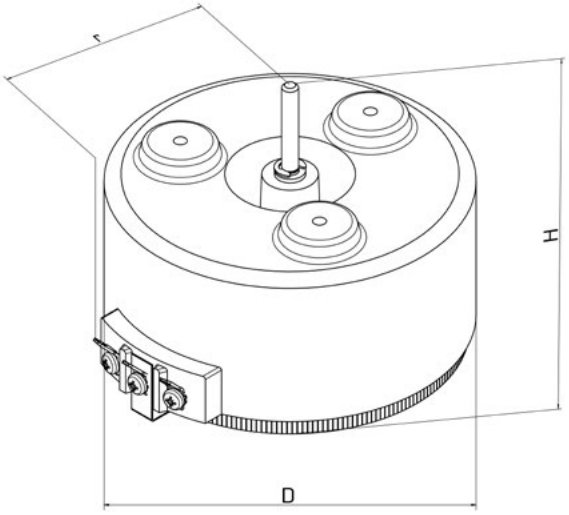

Standards:

EN 61558-2-13 Auto transformers

EN 61558-2-14 Variable transformers

Model	Current [A]	Voltage 230 V 0 - 230 V Art. Nr.	Current [A]	Voltage 230 V 0 - 260 V Art. Nr.	Current [A]	Voltage 230 V 0 - 300 V Art. Nr.	Current [A]	Voltage 400 V 0 - 400 V Art. Nr.	Current [A]	Voltage 230 V 0 - 115/230 V Art. Nr.
BERS 683-64	0,8	0200-01-000064	---	---	---	---	---	---	0,8	0200-05-000064
BERS 683-65	1,0	0200-01-000065	0,5	0200-02-000065	---	---	---	---	1,0	0200-05-000065
BERS 683-73	0,8	0200-01-000073	---	---	---	---	---	---	0,8	0200-05-000073
BERS 683-74	1,0	0200-01-000074	---	---	---	---	---	---	1,0	0200-05-000074
BERS 683-75	1,25	0200-01-000075	0,8	0200-02-000075	---	---	---	---	1,25	0200-05-000075
BERS 683-76	1,6	0200-01-000076	1,0	0200-02-000076	---	---	---	---	1,6	0200-05-000076
BERS 683-84	1,6	0200-01-000084	0,8	0200-02-000084	---	---	---	---	1,6	0200-05-000084
BERS 683-85	2,0	0200-01-000085	1,0	0200-02-000085	---	---	---	---	2,0	0200-05-000085
BERS 683-86	2,5	0200-01-000086	2,0	0200-02-000086	---	---	---	---	2,5	0200-05-000086
BERS 683-94	2,5	0200-01-000094	1,6	0200-02-000094	1,0	0200-03-000094	0,8	0200-04-000094	2,5	0200-05-000094
BERS 683-95	3,2	0200-01-000095	2,0	0200-02-000095	1,25	0200-03-000095	1,0	0200-04-000095	3,2	0200-05-000095
BERS 683-96	---	---	2,5	0200-02-000096	1,6	0200-03-000096	1,25	0200-04-000096	---	---
BERS 683-97	4,0	0200-01-000097	3,2	0200-02-000097	---	---	---	---	4,0	0200-05-000097
BERS 684-114	4,0	0200-01-000114	2,0	0200-02-000114	1,6	0200-03-000114	1,6	0200-04-000114	4,0	0200-05-000114
BERS 684-115	5,0	0200-01-000115	4,0	0200-02-000115	2,0	0200-03-000115	2,0	0200-04-000115	5,0	0200-05-000115
BERS 684-116	6,3	0200-01-000116	5,0	0200-02-000116	3,2	0200-03-000116	2,5	0200-04-000116	6,3	0200-05-000116
BERS 684-117	8,0	0200-01-000117	---	0200-02-000117	4,0	0200-03-000117	---	---	8,0	0200-05-000117
BERS 684-135	6,3	0200-01-000135	5,0	0200-02-000135	---	---	3,2	0200-04-000135	6,3	0200-05-000135
BERS 684-136	8,0	0200-01-000136	6,3	0200-02-000136	5,0	0200-03-000136	4,0	0200-04-000136	8,0	0200-05-000136
BERS 684-137	10,0	0200-01-000137	8,0	0200-02-000137	---	---	5,0	0200-04-000137	10,0	0200-05-000137
BERS 684-157	12,5	0200-01-000157	10,0	0200-02-000157	6,3	0200-03-000157	6,3	0200-04-000157	12,5	0200-05-000157
BERS 684-178	16,0	0200-01-000178	12,5	0200-02-000178	8,0	0200-03-000178	8,0	0200-04-000178	16,0	0200-05-000178
BERS 684-217	20,0	0200-01-000217	---	---	---	---	10,0	0200-04-000217	20,0	0200-05-000217
BERS 684-218	---	---	16,0	0200-02-000218	10,0	0200-03-000218	---	---	---	---
BERS 684-257	25,0	0200-01-000257	---	---	12,5	0200-03-000257	12,5	0200-04-000257	25,0	0200-05-000257
BERS 684-258	---	---	20,0	0200-02-000258	16,0	0200-03-000258	16,0	0200-04-000258	---	---
BERS 684-297	---	---	25,0	0200-02-000297	---	---	---	---	---	---
BERS 684-298	---	---	---	---	20,0	0200-03-000298	---	---	---	---
BERS 684-358	---	---	---	---	25,0	0200-03-000358	20,0	0200-04-000358	---	---

Model	Copper [kg]	Total [kg]	Dimensions [mm]					
			D	H	Ø Mount. 3x120°	Screw	Ø Shaft	r
BERS 683-64	0,04	1,10	76	66	26	M4	6	54
BERS 683-65	0,05	1,30	76	76	26	M4	6	54
BERS 683-73	0,04	1,30	98	82	26	M4	6	71
BERS 683-74	0,05	1,40	98	85	26	M4	6	71
BERS 683-75	0,08	1,70	98	96	26	M4	6	71
BERS 683-76	0,10	2,00	98	106	26	M4	6	71
BERS 683-84	0,09	1,80	108	86	26	M4	6	76
BERS 683-85	0,12	2,10	98	76	26	M4	6	64
BERS 683-86	0,16	2,60	98	86	26	M4	6	64
BERS 683-94	0,14	2,30	118	96	26	M4	6	82
BERS 683-95	0,25	2,80	108	78	26	M4	6	70
BERS 683-96	0,30	3,40	108	88	26	M4	6	70
BERS 683-97	0,37	3,90	108	117	80	M6	6	70
BERS 684-114	0,30	3,40	145	105	80	M6	6	88
BERS 684-115	0,37	4,20	135	95	80	M6	6	83
BERS 684-116	0,45	5,00	135	106	80	M6	6	83
BERS 684-117	0,60	5,80	135	127	80	M6	6	83
BERS 684-135	0,55	5,20	150	112	110	M8	10	92
BERS 684-136	0,85	6,20	150	122	110	M8	10	92
BERS 684-137	1,00	7,40	150	132	110	M8	10	92
BERS 684-157	1,30	9,80	175	135	110	M8	10	110
BERS 684-178	1,60	13,5	195	152	110	M8	10	120
BERS 684-217	2,20	16,0	235	155	150	M8	10	145
BERS 684-218	2,40	18,0	235	165	150	M8	10	145
BERS 684-257	3,10	19,0	280	155	150	M8	10	160
BERS 684-258	3,30	21,0	280	165	150	M8	10	160
BERS 684-297	4,50	27,0	320	160	150	M8	10	200
BERS 684-298	4,80	28,0	320	180	150	M8	10	200
BERS 684-358	5,60	34,0	390	180	150	M10	10	230

General characteristics:

- single-phase follow controller
- compact design
- control electronics (MPRP2010) with motor drive as standard
- open design for stationary installation
- IPxxB, insulation class B, max ambient temperature 40°C (ta 40°C/B)

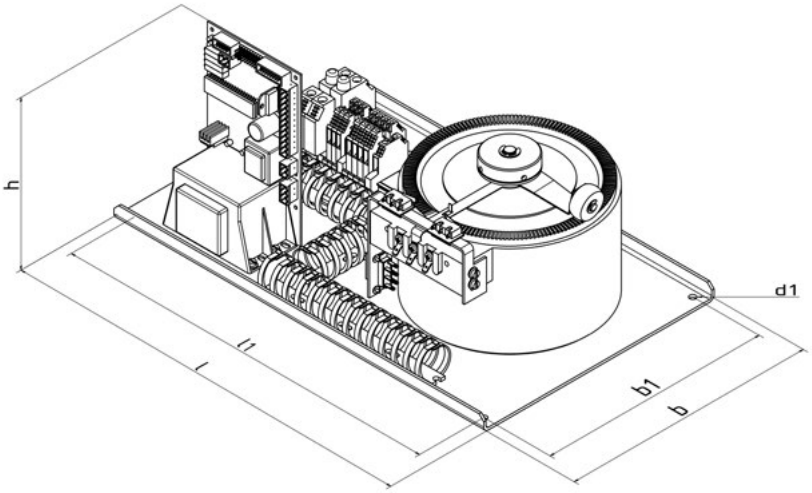

Standards:

EN 61558-2-13 Auto transformers

EN 61558-2-14 Variable transformers

Model	Current [A]	Voltage 230 V 0 - 230 V Art. Nr.	Current [A]	Voltage 230 V 0 - 260 V Art. Nr.	Current [A]	Voltage 230 V 0 - 300 V Art. Nr.	Current [A]	Voltage 400 V 0 - 400 V Art. Nr.	Current [A]	Voltage 230 V 0 - 115/230 V Art. Nr.
BERS 757-84	1,6	0201-01-000084	0,8	0201-02-000084	---	---	---	---	1,6	0201-05-000084
BERS 757-85	2,0	0201-01-000085	1,0	0201-02-000085	---	---	---	---	2,0	0201-05-000085
BERS 757-86	2,5	0201-01-000086	2,0	0201-02-000086	---	---	---	---	2,5	0201-05-000086
BERS 757-94	2,5	0201-01-000094	1,6	0201-02-000094	1,0	0201-03-000094	0,8	0201-04-000094	2,5	0201-05-000094
BERS 757-95	3,2	0201-01-000095	2,0	0201-02-000095	1,25	0201-03-000095	1,0	0201-04-000095	3,2	0201-05-000095
BERS 757-96	---	---	2,5	0201-02-000096	1,6	0201-03-000096	1,25	0201-04-000096	---	---
BERS 757-97	4,0	0201-01-000097	3,2	0201-02-000097	---	---	---	---	4,0	0201-05-000097
BERS 757-114	4,0	0201-01-000114	2,0	0201-02-000114	1,6	0201-03-000114	1,6	0201-04-000114	4,0	0201-05-000114
BERS 757-115	5,0	0201-01-000115	4,0	0201-02-000115	2,0	0201-03-000115	2,0	0201-04-000115	5,0	0201-05-000115
BERS 757-116	6,3	0201-01-000116	5,0	0201-02-000116	3,2	0201-03-000116	2,5	0201-04-000116	6,3	0201-05-000116
BERS 757-117	8,0	0201-01-000117	---	0201-02-000117	4,0	0201-03-000117	---	---	8,0	0201-05-000117
BERS 757-135	6,3	0201-01-000135	5,0	0201-02-000135	---	---	3,2	0201-04-000135	6,3	0201-05-000135
BERS 757-136	8,0	0201-01-000136	6,3	0201-02-000136	5,0	0201-03-000136	4,0	0201-04-000136	8,0	0201-05-000136
BERS 757-137	10,0	0201-01-000137	8,0	0201-02-000137	---	---	5,0	0201-04-000137	10,0	0201-05-000137
BERS 757-157	12,5	0201-01-000157	10,0	0201-02-000157	6,3	0201-03-000157	6,3	0201-04-000157	12,5	0201-05-000157
BERS 757-178	16,0	0201-01-000178	12,5	0201-02-000178	8,0	0201-03-000178	8,0	0201-04-000178	16,0	0201-05-000178

Model	Copper [kg]	Total [kg]	Dimensions [mm]					
			l	l1	b	b1	h	d1
BERS 757-84	0,09	4,20	273	250	173	150	170	6,5
BERS 757-85	0,12	4,50	273	250	173	150	170	6,5
BERS 757-86	0,16	4,70	273	250	173	150	170	6,5
BERS 757-94	0,14	4,80	273	250	173	150	170	6,5
BERS 757-95	0,25	5,10	273	250	173	150	170	6,5
BERS 757-96	0,30	5,50	273	250	173	150	170	6,5
BERS 757-97	0,37	5,90	273	250	173	150	170	6,5
BERS 757-114	0,30	6,70	323	300	198	175	170	6,5
BERS 757-115	0,37	7,40	323	300	198	175	170	6,5
BERS 757-116	0,45	8,10	323	300	198	175	170	6,5
BERS 757-117	0,60	8,70	323	300	198	175	170	6,5
BERS 757-135	0,55	8,80	323	300	198	175	170	6,5
BERS 757-136	0,85	9,80	323	300	198	175	170	6,5
BERS 757-137	1,00	10,9	323	300	198	175	170	6,5
BERS 757-157	1,30	14,3	398	375	248	225	170	6,5
BERS 757-178	1,60	18,5	398	375	248	225	170	6,5

General characteristics:

- single-phase variable toroidal auto transformer
- compact design
- open design for stationary installation
- IPxxB, insulation class B, max ambient temperature 40°C (ta 40°C/B)
- installed in a robust steel frame
- control electronic MPRP with motor drive as standard

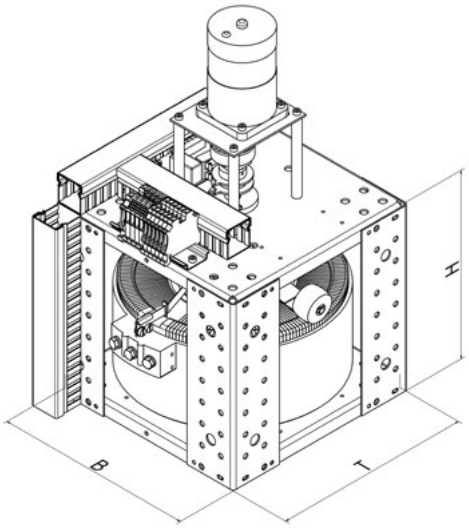

Standards:

EN 61558-2-13 Auto transformers

EN 61558-2-14 Variable transformers

Model	Current [A]	Voltage 230 V 0 - 230 V Art. Nr.	Current [A]	Voltage 230 V 0 - 260 V Art. Nr.	Current [A]	Voltage 230 V 0 - 300 V Art. Nr.	Current [A]	Voltage 400 V 0 - 400 V Art. Nr.	Current [A]	Voltage 230 V 0 - 115/230 V Art. Nr.
BERS 832-217	20,0	0202-01-000217	---	---	---	---	10,0	0202-04-000217	20,0	0202-05-000217
BERS 832-218	---	---	16,0	0202-02-000218	10,0	0202-03-000218	---	---	---	---
BERS 832-257	25,0	0202-01-000257	---	---	12,5	0202-03-000257	12,5	0202-04-000257	25,0	0202-05-000257
BERS 832-258	---	---	20,0	0202-02-000258	16,0	0202-03-000258	16,0	0202-04-000258	---	---
BERS 832-297	---	---	25,0	0202-02-000297	---	---	---	---	---	---
BERS 832-298	---	---	---	---	20,0	0202-03-000298	---	---	---	---
BERS 832-358	---	---	---	---	25,0	0202-03-000358	20,0	0202-04-000358	---	---
BERS 832-2507	32,0	0202-01-002507	---	---	---	---	---	---	32,0	0202-05-002507
BERS 832-2508	---	---	---	---	---	---	---	---	---	---
BERS 832-2907	40,0	0202-01-002907	---	---	---	---	---	---	40,0	0202-05-002907
BERS 832-2908	---	---	32,0	0202-02-002908	---	---	---	---	---	---
BERS 832-2512	50,0	0202-01-002512	40,0	0202-02-002512	---	---	25,0	0202-04-002512	50,0	0202-05-002512
BERS 832-2912	63,0	0202-01-002912	50,0	0202-02-002912	32,0	0202-03-002912	40,0	0202-04-002912	63,0	0202-05-002912
BERS 832-3512	75,0	0202-01-003512	---	---	40,0	0202-03-003512	---	---	75,0	0202-05-003512
BERS 832-3515	100,0	0202-01-003515	63,0	0202-02-003515	63,0	0202-03-003515	50,0	0202-04-003515	100,0	0202-05-003515
BERS 832-3518	125,0	0202-01-003518	100,0	0202-02-003518	80,0	0202-03-003518	63,0	0202-04-003518	125,0	0202-05-003518
BERS 832-5515	150,0	0202-01-005515	125,0	0202-02-005515	100,0	0202-03-005515	100,0	0202-04-005515	150,0	0202-05-005515
BERS 832-5520	200,0	0202-01-005520	200,0	0202-02-005520	150,0	0202-03-005520	150,0	0202-04-005520	200,0	0202-05-005520

Model	Copper [kg]	Total [kg]	Dimensions [mm]		
			B	T	H
BERS 832-217	2,17	18,4	240	240	218
BERS 832-218	2,27	19,4	240	240	218
BERS 832-257	3,17	22,0	315	315	218
BERS 832-258	3,27	23,3	315	315	218
BERS 832-297	4,50	29,3	315	315	218
BERS 832-298	4,60	30,0	315	315	218
BERS 832-358	5,50	36,7	390	390	218
BERS 832-2507	3,27	23,4	390	390	243
BERS 832-2508	3,90	26,0	390	390	243
BERS 832-2907	4,50	29,4	390	390	243
BERS 832-2908	4,70	30,0	390	390	243
BERS 832-2512	6,00	46,7	390	390	320
BERS 832-2912	8,00	53,4	390	390	320
BERS 832-3512	12,5	80,0	465	465	320
BERS 832-3515	14,0	86,7	465	465	370
BERS 832-3518	16,3	100	465	465	420
BERS 832-5515	35,4	187	620	620	520
BERS 832-5520	50,7	250	620	620	520

General characteristics:

- three-phase variable toroidal auto transformer
- compact design
- three point mounting
- open design for stationary installation
- IPxxB, insulation class B, max ambient temperature 40°C (ta 40°C/B)
- manual or motor drive (please order separately)

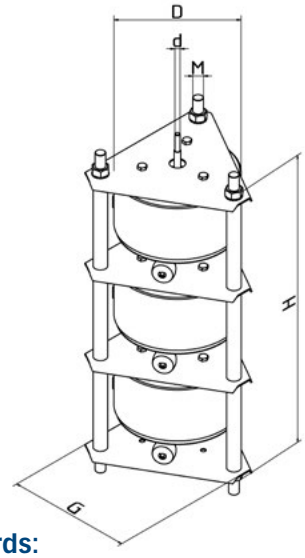

Standards:

EN 61558-2-13 Auto transformers
EN 61558-2-14 Variable transformers

Model	Current [A]	Voltage 400 V 0 - 400 V Art. Nr.	Current [A]	Voltage 400 V 0 - 450 V Art. Nr.	Current [A]	Voltage 400 V 0 - 520 V Art. Nr.	Current [A]	Voltage 690 V 0 - 690 V Art. Nr.	Current [A]	Voltage 400 V 0 - 200/400 V Art. Nr.
BDRS 687-73	0,8	0203-01-000073	---	---	---	---	---	---	0,8	0203-05-000073
BDRS 687-74	1,0	0203-01-000074	0,5	0203-02-000074	---	---	---	---	1,0	0203-05-000074
BDRS 687-75	1,25	0203-01-000075	0,8	0203-02-000075	---	---	---	---	1,25	0203-05-000075
BDRS 687-84	1,6	0203-01-000084	0,8	0203-02-000084	---	---	---	---	1,6	0203-05-000084
BDRS 687-85	2,0	0203-01-000085	1,0	0203-02-000085	---	---	---	---	2,0	0203-05-000085
BDRS 687-94	2,5	0203-01-000094	1,6	0203-02-000094	1,0	0203-03-000094	0,8	0203-04-000094	2,5	0203-05-000094
BDRS 687-95	3,2	0203-01-000095	2,0	0203-02-000095	1,25	0203-03-000095	1,0	0203-04-000095	3,2	0203-05-000095
BDRS 687-114	4,0	0203-01-000114	2,0	0203-02-000114	1,6	0203-03-000114	1,6	0203-04-000114	4,0	0203-05-000114
BDRS 687-115	5,0	0203-01-000115	4,0	0203-02-000115	2,0	0203-03-000115	2,0	0203-04-000115	5,0	0203-05-000115
BDRS 687-116	6,3	0203-01-000116	5,0	0203-02-000116	2,5	0203-03-000116	2,5	0203-04-000116	6,3	0203-05-000116
BDRS 687-135	6,3	0203-01-000135	5,0	0203-02-000135	---	---	3,2	0203-04-000135	6,3	0203-05-000135
BDRS 687-136	8,0	0203-01-000136	6,3	0203-02-000136	5,0	0203-03-000136	4,0	0203-04-000136	8,0	0203-05-000136
BDRS 687-137	10,0	0203-01-000137	8,0	0203-02-000137	---	---	5,0	0203-04-000137	10,0	0203-05-000137
BDRS 687-157	12,5	0203-01-000157	10,0	0203-02-000157	6,3	0203-03-000157	6,3	0203-04-000157	12,5	0203-05-000157
BDRS 687-178	16,0	0203-01-000178	12,5	0203-02-000178	8,0	0203-03-000178	8,0	0203-04-000178	16,0	0203-05-000178

Model	Copper [kg]	Total [kg]	Dimensions [mm]				
			G	H	D	M	d
BDRS 687-73	0,11	5,50	155	300	140	M10	6
BDRS 687-74	0,12	5,80	155	300	140	M10	6
BDRS 687-75	0,21	6,50	155	320	140	M10	6
BDRS 687-84	0,27	6,70	155	300	140	M10	6
BDRS 687-85	0,36	7,40	155	320	140	M10	6
BDRS 687-94	0,48	7,90	155	300	140	M10	6
BDRS 687-95	0,75	9,50	155	320	140	M10	6
BDRS 687-114	0,90	11,5	175	330	160	M10	6
BDRS 687-115	1,11	14,0	175	360	160	M10	6
BDRS 687-116	1,35	16,5	175	390	160	M10	6
BDRS 687-135	2,10	21,0	240	405	220	M12	10
BDRS 687-136	2,70	24,0	240	435	220	M12	10
BDRS 687-137	3,00	27,0	240	485	220	M12	10
BDRS 687-157	3,60	30,0	240	485	220	M12	10
BDRS 687-178	4,80	44,0	260	535	240	M16	10

General characteristics:

- three-phase variable toroidal auto transformer
- compact design
- open design for stationary installation
- IPxxB, insulation class B, max ambient temperature 40°C (ta 40°C/B)
- installed in a robust steel frame
- control electronic MPRP with motor drive as standard

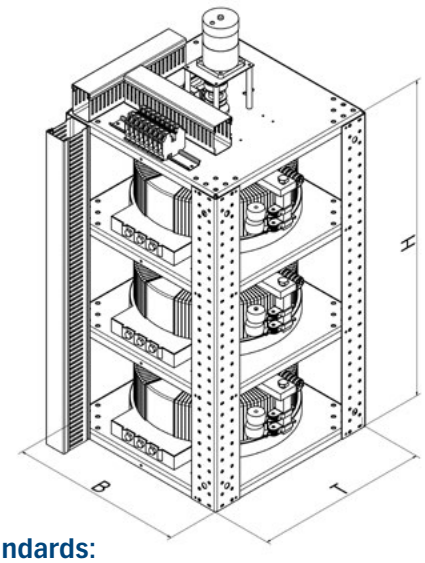

Standards:

EN 61558-2-13 Auto transformers

EN 61558-2-14 Variable transformers

Model	Current [A]	Voltage 400 V 0 - 400 V Art. Nr.	Current [A]	Voltage 400 V 0 - 450 V Art. Nr.	Current [A]	Voltage 400 V 0 - 520 V Art. Nr.	Current [A]	Voltage 690 V 0 - 690 V Art. Nr.	Current [A]	Voltage 400 V 0 - 200/400 V Art. Nr.
BDRS 832-217	20,0	0204-01-000217	---	---	---	---	10,0	0204-04-000217	20,0	0204-05-000217
BDRS 832-218	---	---	16,0	0204-02-000218	10,0	0204-03-000218	---	0204-04-000218	---	---
BDRS 832-257	25,0	0204-01-000257	---	---	12,5	0204-03-000257	12,5	0204-04-000257	25,0	0204-05-000257
BDRS 832-258	---	---	20,0	0204-02-000258	16,0	0204-03-000258	16,0	0204-04-000258	---	---
BDRS 832-297	---	---	25,0	0204-02-000297	---	---	---	---	---	---
BDRS 832-298	---	---	---	---	20,0	0204-03-000298	---	---	---	---
BDRS 832-358	---	---	---	---	25,0	0204-03-000358	20,0	0204-04-000358	---	---
BDRS 832-2507	32,0	0204-01-002507	---	---	---	---	---	---	32,0	0204-05-002507
BDRS 832-2508	---	---	---	---	---	---	---	---	---	---
BDRS 832-2907	40,0	0204-01-002907	---	---	---	---	---	---	40,0	0204-05-002907
BDRS 832-2908	---	---	32,0	0204-02-002908	---	---	---	---	---	---
BDRS 832-2512	50,0	0204-01-002512	40,0	0204-02-002512	---	---	---	---	50,0	0204-05-002512
BDRS 832-2912	63,0	0204-01-002912	50,0	0204-02-002912	32,0	0204-03-002912	40,0	0204-04-002912	63,0	0204-05-002912
BDRS 832-3512	75,0	0204-01-003512	---	---	40,0	0204-04-003512	---	---	75,0	0204-05-003512
BDRS 832-3515	100,0	0204-01-003515	63,0	0204-02-003515	63,0	0204-03-003515	50,0	0204-04-003515	100,0	0204-05-003515
BDRS 832-3518	125,0	0204-01-003518	100,0	0204-02-003518	80,0	0204-03-003518	63,0	0204-04-003518	125,0	0204-05-003518
BDRS 832-5515	150,0	0204-01-005515	150,0	0204-02-005515	100,0	0204-03-005515	100,0	0204-04-005515	150,0	0204-05-005515
BDRS 832-5520	200,0	0204-01-005520	200,0	0204-02-005520	150,0	0204-03-005520	150,0	0204-04-005520	200,0	0204-05-005520

Model	Copper [kg]	Total [kg]	Dimensions [mm]		
			B	T	H
BDRS 832-217	6,51	55,0	240	240	618
BDRS 832-218	6,80	58,0	240	240	618
BDRS 832-257	9,50	66,0	315	315	618
BDRS 832-258	9,80	70,0	315	315	618
BDRS 832-297	13,5	88,0	315	315	618
BDRS 832-298	13,8	90,0	315	315	618
BDRS 832-358	16,5	110	390	390	620
BDRS 832-2507	9,80	70,0	390	390	695
BDRS 832-2508	11,7	78,0	390	390	695
BDRS 832-2907	13,5	88,0	390	390	695
BDRS 832-2908	13,8	90,0	390	390	695
BDRS 832-2512	18,0	140	390	390	920
BDRS 832-2912	24,0	160	390	390	920
BDRS 832-3512	37,5	240	465	465	920
BDRS 832-3515	42,0	260	465	465	1070
BDRS 832-3518	48,9	300	465	465	1220
BDRS 832-5515	106	560	620	620	1520
BDRS 832-5520	152	750	620	620	1520

Accessories, knobs

Designation	Art. No.	Dimensions [mm]				
		a	b	c	d	e
BRSK 40-6	0206-01-000001	38	28	12	40	6
BRSK 60-6	0206-01-000002	48	34	28	60	6
BRSK 60-10	0206-01-000003	48	34	28	60	10
BRSK 90-6	0206-01-000004	76	40	28	90	6
BRSK 90-10	0206-01-000005	76	40	28	90	10

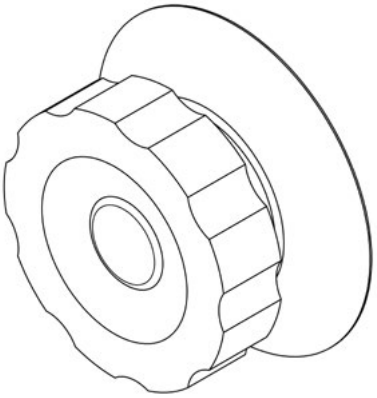

Accessories, Scales

Designation	Art. No.	Ø	Label
BRSS 60-100	0206-02-000001	60	0 - 100 %
BRSS 60-230	0206-02-000002	60	0 - 230 V
BRSS 90-100	0206-02-000003	90	0 - 100 %
BRSS 90-230	0206-02-000004	90	0 - 230 V
BRSS 130-100	0206-02-000005	130	0 - 100 %
BRSS 130-230	0206-02-000006	130	0 - 230 V

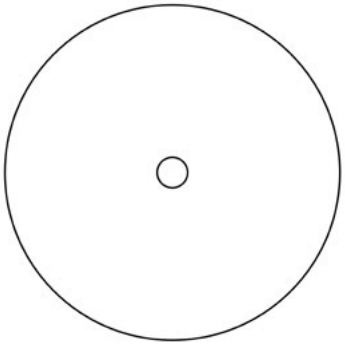

Accessories, Remote control

Designation	Art. No.	Description
BRSF Fern	0206-05-000001	Remote control with infrared receiver for programming the control electronic MPRP

Accessories, Variable speed drives

Designation	Art. No.	Description
BRSR AC	0206-03-000001	230V AC motor, control via buttons up, down
BRSR DC	0206-03-000002	24V DC motor, control via buttons up, down
BRSR DC-MPRP	0206-03-000003	24V DC motor with control electronic, control via potentiometer or 0-10V signal

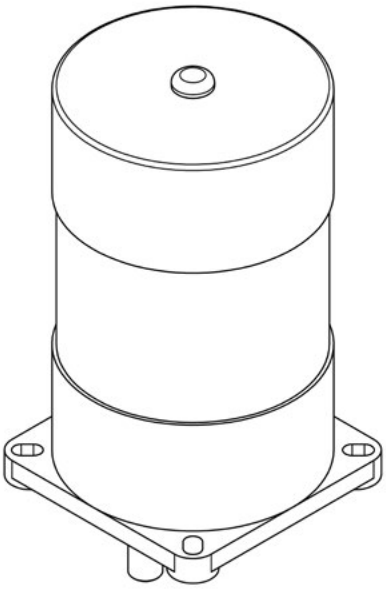

Accessories, Circuit boards

Designation	Art. No.	Description
BRSP MPRP	0206-04-000001	Control electronic for DC motors
BRSP RS232	0206-04-000002	RS232 / 485 Interface for control electronic. For control via PC
BRSP ES	0206-04-000003	Additional limiting switch board with potential free contracts.

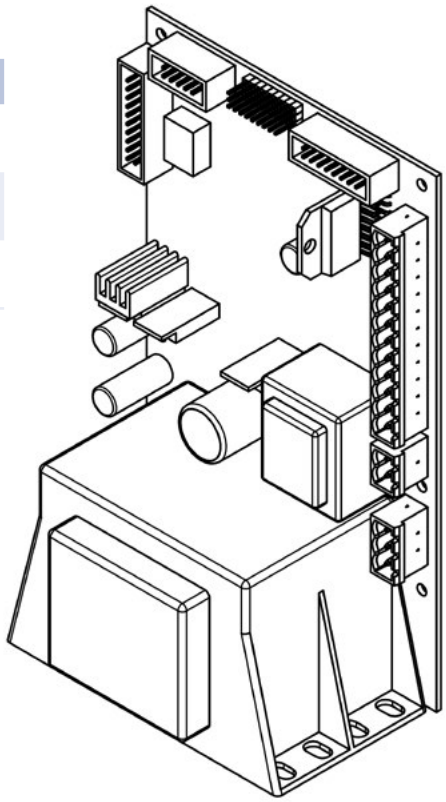

General characteristics:

- single-phase voltage stabilizer
- temperature class ta 40°C/B
- installed in a steel cabinet IP54
- main switch, fuse protection, bypass switch (optional)
- input voltage: AC 230V +…%
- output voltage: AC230 V +-1%
- other tolerances and power rates on request

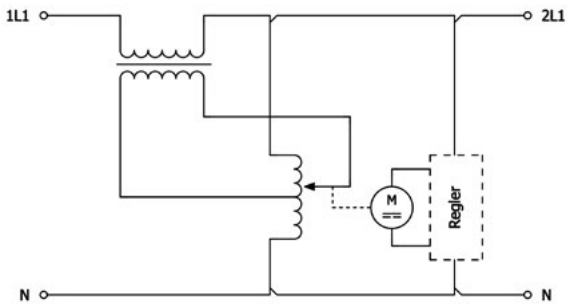

Standards:

EN 61558-2-13 Auto transformers

EN 61558-2-14 Variable transformers

Power	Fuse [A]	Voltage tolerance				
		10%	15%	20%	25%	30%
0,43 kVA	2,0	---	---	---	---	0804-10-000002
0,66 kVA	3,0	---	---	---	0803-10-000003	0804-10-000003
0,90 kVA	4,0	---	---	0802-10-000004	0803-10-000004	0804-10-000004
1,37 KVA	6,0	---	0801-10-000006	0802-10-000006	0803-10-000006	0804-10-000006
2,30 kVA	10,0	0800-10-000010	0801-10-000010	0802-10-000010	0803-10-000010	0804-10-000010
2,97 kVA	13,0	0800-10-000013	0801-10-000013	0802-10-000013	0803-10-000013	0804-10-000013
3,67 kVA	16,0	0800-10-000016	0801-10-000016	0802-10-000016	0803-10-000016	0804-10-000016
4,60 kVA	20,0	0800-10-000020	0801-10-000020	0802-10-000020	0803-10-000020	0804-10-000020
5,73 kVA	25,0	0800-10-000025	0801-10-000025	0802-10-000025	0803-10-000025	0804-10-000025
7,34 kVA	32,0	0800-10-000032	0801-10-000032	0802-10-000032	0803-10-000032	0804-10-000032
9,20 kVA	40,0	0800-10-000040	0801-10-000040	0802-10-000040	0803-10-000040	0804-10-000040
11,5 kVA	50,0	0800-10-000050	0801-10-000050	0802-10-000050	0803-10-000050	0804-10-000050
14,5 kVA	63,0	0800-10-000063	0801-10-000063	0802-10-000063	0803-10-000063	0804-10-000063
18,4 kVA	80,0	0800-10-000080	0801-10-000080	0802-10-000080	0803-10-000080	0804-10-000080
23,0kVA	100,0	0800-10-000100	0801-10-000100	0802-10-000100	0803-10-000100	0804-10-000100
28,7 kVA	125,0	0800-10-000125	0801-10-000125	0802-10-000125	0803-10-000125	0804-10-000125
36,7 kVA	160,0	0800-10-000160	0801-10-000160	0802-10-000160	0803-10-000160	---
46,0 kVA	200,0	0800-10-000200	0801-10-000200	0802-10-000200	---	---
57,3 kVA	250,0	0800-10-000250	0801-10-000250	---	---	---
72,3 kVA	315,0	0800-10-000315	0801-10-000315	---	---	---
92,0 kVA	400,0	0800-10-000400	---	---	---	---
115 kVA	500,0	0800-10-000500	---	---	---	---

General characteristics:

- single-phase voltage stabilizer
- temperature class ta 40°C/B
- installed in a steel cabinet IP54, RAL 7035
- main switch, fuse protection, bypass switch (optional)
- input voltage: 3AC 400V +…%
- output voltage: 3AC400 V +-1%
- other tolerances and power rates on request

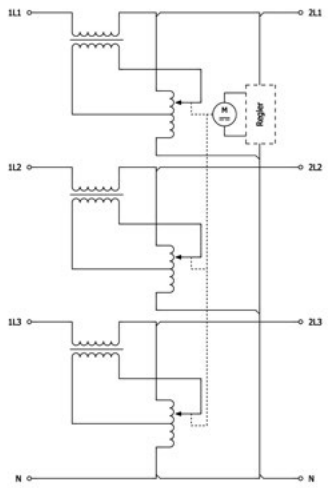

Standards:

EN 61558-2-13 Auto transformers

EN 61558-2-14 Variable transformers

Power	Fuse [A]	Voltage tolerance				
		10%	15%	20%	25%	30%
1,3 kVA	2,0	---	---	---	---	0814-10-000002
2,0 kVA	3,0	---	---	---	0813-10-000003	0814-10-000003
2,7 kVA	4,0	---	---	0812-10-000004	0813-10-000004	0814-10-000004
4,1 KVA	6,0	---	0811-10-000006	0812-10-000006	0813-10-000006	0814-10-000006
6,9 kVA	10,0	0810-10-000010	0811-10-000010	0812-10-000010	0813-10-000010	0814-10-000010
8,9 kVA	13,0	0810-10-000013	0811-10-000013	0812-10-000013	0813-10-000013	0814-10-000013
11,0 kVA	16,0	0810-10-000016	0811-10-000016	0812-10-000016	0813-10-000016	0814-10-000016
13,8 kVA	20,0	0810-10-000020	0811-10-000020	0812-10-000020	0813-10-000020	0814-10-000020
17,2 kVA	25,0	0810-10-000025	0811-10-000025	0812-10-000025	0813-10-000025	0814-10-000025
22,0 kVA	32,0	0810-10-000032	0811-10-000032	0812-10-000032	0813-10-000032	0814-10-000032
27,6 kVA	40,0	0810-10-000040	0811-10-000040	0812-10-000040	0813-10-000040	0814-10-000040
34,5 kVA	50,0	0810-10-000050	0811-10-000050	0812-10-000050	0813-10-000050	0814-10-000050
43,4 kVA	63,0	0810-10-000063	0811-10-000063	0812-10-000063	0813-10-000063	0814-10-000063
55,2 kVA	80,0	0810-10-000080	0811-10-000080	0812-10-000080	0813-10-000080	0814-10-000080
69,0 kVA	100,0	0810-10-000100	0811-10-000100	0812-10-000100	0813-10-000100	0814-10-000100
86,2 kVA	125,0	0810-10-000125	0811-10-000125	0812-10-000125	0813-10-000125	0814-10-000125
110 kVA	160,0	0810-10-000160	0811-10-000160	0812-10-000160	0813-10-000160	---
138 kVA	200,0	0810-10-000200	0811-10-000200	0812-10-000200	---	---
172 kVA	250,0	0810-10-000250	0811-10-000250	---	---	---
217 kVA	315,0	0810-10-000315	0811-10-000315	---	---	---
276 kVA	400,0	0810-10-000400	---	---	---	---
345 kVA	500,0	0810-10-000500	---	---	---	---

Notes

5 | POWER SUPPLIES

Notes

General characteristics:

- single-phase power supply without capacitor
- input voltage: AC 220/230/240 V
- output voltage: DC 24V
- ripple 48 % (smaller available on request)
- voltage adjustments by +-5% tappings at input side
- open design for stationary installation
- back of hand and finger contact protected terminals, according to DGUV rule 3
- IPxxP, insulation class B, max ambient temperature 40°C (ta 40°C/B)
- other tolerances and power rates on request

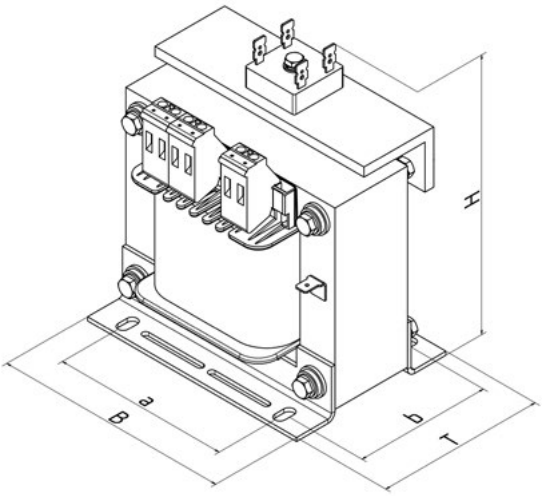

Standards:

EN 61558-2-6 Safety transformer

Model	Art-No.	Current [A]	Size	Copper [kg]	Total [kg]	Dimensions [mm]					
						B	T	H	a	b	Screw
BENT 1	0900-10-000001	1	EI 66/34	0,20	1,00	66	78	90	50	52	M4
BENT 3	0900-10-000003	3	EI 84/43	0,35	2,40	85	82	100	64	61	M4
BENT 5	0900-10-000005	5	EI 96/45	0,63	3,30	100	88	150	84	70	M5
BENT 8	0900-10-000008	8	EI 105/60	0,65	5,50	105	104	150	84	85	M5
BENT 10	0900-10-000010	10	EI 120/41	1,20	5,50	120	90	160	90	70	M5
BENT 15	0900-10-000015	15	EI 120/73	1,50	7,60	120	120	160	90	102	M5

General characteristics:

- three-phase power supply without capacitor, standing
- input voltage: 3AC 380/400/420 V
- output voltage: DC 24V
- ripple 4,8 % (without capacitor, B6 connection)
- ripple 1 % (without capacitor, B12 connection)
- high ambient temperature possible, because no capacitor installed
- voltage adjustments by +-5% tappings at input side
- open design for stationary installation
- back of hand and finger contact protected terminals, according to DGUV rule 3
- IPxxB, insulation class B, max ambient temperature 40°C (ta 40°C/B)
- other tolerances and power rates on request

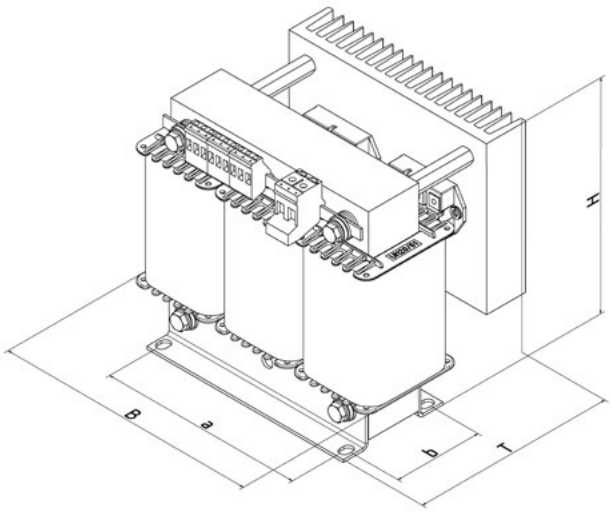

Standards:

EN 61558-2-6 Safety transformer

B6 circuit, 4,8% ripple

Model	Art-No.	Current [A]	Size	Copper [kg]	Total [kg]	Dimensions [mm]					
						B	T	H	a	b	Screw
BDNTS 6-5	0901-10-000005	5	3UI 60/31	0,70	3,00	119	67	175	90	49	M4
BDNTS 6-7,5	0901-10-0007,5	7,5	3UI 75/26	1,30	4,40	150	67	200	113	49	M5
BDNTS 6-10	0901-10-000010	10	3UI 75/26	1,50	4,60	150	67	200	113	49	M5
BDNTS 6-15	0901-10-000015	15	3UI 75/41	1,80	6,80	150	87	200	113	64	M5
BDNTS 6-20	0901-10-000020	20	3UI 90/31	2,70	8,30	178	131	167	136	57	M6
BDNTS 6-25	0901-10-000025	25	3UI 90/41	3,20	9,40	178	141	167	136	67	M6
BDNTS 6-30	0901-10-000030	30	3UI 90/51	3,40	10,5	178	151	167	136	77	M6
BDNTS 6-40	0901-10-000040	40	3UI 120/41	5,00	17,0	240	200	217	185	71	M8
BDNTS 6-50	0901-10-000050	50	3UI 120/51	5,30	19,0	240	210	217	185	81	M8
BDNTS 6-60	0901-10-000060	60	3UI 120/61	5,80	23,0	240	206	270	185	91	M8
BDNTS 6-80	0901-10-000080	80	3UI 120/66	7,50	27,0	240	255	281	185	96	M8
BDNTS 6-90	0901-10-000090	90	3UI 120/75	8,50	29,0	240	262	281	185	105	M8

B12 circuit, 1% ripple

Model	Art-No.	Current [A]	Size	Copper [kg]	Total [kg]	Dimensions [mm]					
						B	T	H	a	b	Screw
BDNTS 12-5	0902-10-000005	5	3UI 60/31	0,70	3,00	119	67	175	90	49	M4
BDNTS 12-7,5	0902-10-0007,5	7,5	3UI 75/26	1,30	4,40	150	67	200	113	49	M5
BDNTS 12-10	0902-10-000010	10	3UI 75/26	1,50	4,60	150	67	200	113	49	M5
BDNTS 12-15	0902-10-000015	15	3UI 75/41	1,80	6,80	150	87	200	113	64	M5
BDNTS 12-20	0902-10-000020	20	3UI 90/31	2,70	8,30	178	131	167	136	57	M6
BDNTS 12-25	0902-10-000025	25	3UI 90/41	3,20	9,40	178	141	167	136	67	M6
BDNTS 12-30	0902-10-000030	30	3UI 90/51	3,40	10,5	178	151	167	136	77	M6
BDNTS 12-40	0902-10-000040	40	3UI 120/41	5,00	17,0	240	200	217	185	71	M8
BDNTS 12-50	0902-10-000050	50	3UI 120/51	5,30	19,0	240	210	217	185	81	M8
BDNTS 12-60	0902-10-000060	60	3UI 120/61	5,80	23,0	240	206	270	185	91	M8
BDNTS 12-80	0902-10-000080	80	3UI 120/66	7,50	27,0	240	255	281	185	96	M8
BDNTS 12-90	0902-10-000090	90	3UI 120/75	8,50	29,0	240	262	281	185	105	M8

General characteristics:

- three-phase power supply without capacitor, laid
- input voltage: 3AC 380/400/420 V
- output voltage: DC 24V
- ripple 4,8 % (without capacitor, B6 connection)
- ripple 1 % (without capacitor, B12 connection)
- high ambient temperature possible, because no capacitor installed
- voltage adjustments by +-5% tappings at input side
- open design for stationary installation
- back of hand and finger contact protected terminals, according to DGUV rule 3
- IPxxB, insulation class B, max ambient temperature 40°C (ta 40°C/B)
- other tolerances and power rates on request

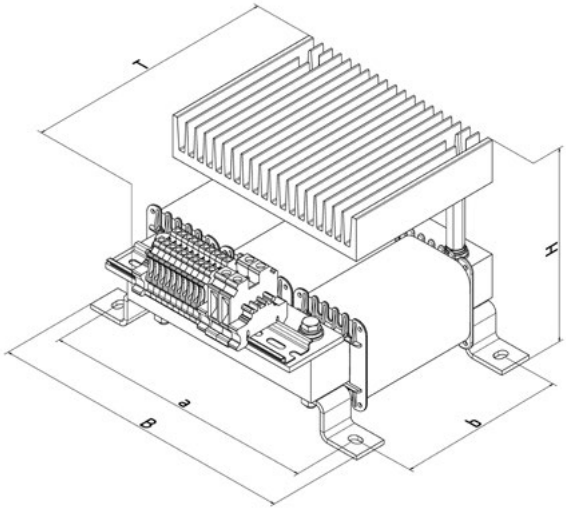

Standards:

EN 61558-2-6 Safety transformer

B6 circuit, 4,8% ripple

Model	Art-No.	Current [A]	Size	Copper [kg]	Total [kg]	Dimensions [mm]					
						B	T	H	a	b	Screw
BDNTL 6-7,5	0903-10-0007,5	7,5	3UI 75/26	1,30	4,40	150	182	98	140	100	M5
BDNTL 6-10	0903-10-000010	10	3UI 75/26	1,50	4,60	150	182	98	140	100	M5
BDNTL 6-15	0903-10-000015	15	3UI 75/41	1,80	6,80	150	182	113	140	100	M5
BDNTL 6-20	0903-10-000020	20	3UI 90/31	2,70	8,30	178	199	160	184	120	M6
BDNTL 6-25	0903-10-000025	25	3UI 90/41	3,20	9,40	178	199	170	184	120	M6
BDNTL 6-30	0903-10-000030	30	3UI 90/51	3,40	10,5	178	199	180	184	120	M6
BDNTL 6-40	0903-10-000040	40	3UI 120/41	5,00	17,0	290	239	193	258	160	M6
BDNTL 6-50	0903-10-000050	50	3UI 120/51	5,30	19,0	290	239	203	258	160	M8
BDNTL 6-60	0903-10-000060	60	3UI 120/61	5,80	23,0	290	239	213	258	160	M8
BDNTL 6-80	0903-10-000080	80	3UI 120/66	7,50	27,0	290	243	260	258	160	M8
BDNTL 6-90	0903-10-000090	90	3UI 120/75	8,50	29,0	290	243	269	258	160	M8

B12 circuit, 1% ripple

Model	Art-No.	Current [A]	Size	Copper [kg]	Total [kg]	Dimensions [mm]					
						B	T	H	a	b	Screw
BDNTL 12-7,5	0904-10-0007,5	7,5	3UI 75/26	1,30	4,40	150	182	98	140	100	M5
BDNTL 12-10	0904-10-000010	10	3UI 75/26	1,50	4,60	150	182	98	140	100	M5
BDNTL 12-15	0904-10-000015	15	3UI 75/41	1,80	6,80	150	182	113	140	100	M5
BDNTL 12-20	0904-10-000020	20	3UI 90/31	2,70	8,30	178	199	160	184	120	M6
BDNTL 12-25	0904-10-000025	25	3UI 90/41	3,20	9,40	178	199	170	184	120	M6
BDNTL 12-30	0904-10-000030	30	3UI 90/51	3,40	10,5	178	199	180	184	120	M6
BDNTL 12-40	0904-10-000040	40	3UI 120/41	5,00	17,0	290	239	193	258	160	M6
BDNTL 12-50	0904-10-000050	50	3UI 120/51	5,30	19,0	290	239	203	258	160	M8
BDNTL 12-60	0904-10-000060	60	3UI 120/61	5,80	23,0	290	239	213	258	160	M8
BDNTL 12-80	0904-10-000080	80	3UI 120/66	7,50	27,0	290	243	260	258	160	M8
BDNTL 12-90	0904-10-000090	90	3UI 120/75	8,50	29,0	290	243	269	258	160	M8

General characteristics:

- power input circuit regulated digitally
- low standby consumption
- no starting inrush current
- coated assemblies (additional protection against dirt and humidity)
- especially high transient strength
- extremely high overload reserve
- efficiency factor up to 94%
- active PFC
- isolated relay contact
- controllable output variables (U/I/P)
- analog and digital interface
- 12V/48V available on request

Standards:

EN 60950-1	safety of information technology equipment
EN 61000-3-2	electromagnetic compatibility (EMV), limits for harmonic currents
EN 61000-6-2	electromagnetic compatibility (EMV), interference immunity of manufactoring locations
EN 61204-3	low voltage power supplies with direct current
EN 55011 Class B	industrial, scientific and medical devices

Model	Art-No.	Input [VAC]	Output [VDC]	Power [W]	Weight [kg]	Dimensions [mm]		
						B	T	H
D-IPS 250C-24	0281-01-100250	100-240	0-30	250	1,20	80	130	139
D-IPS 500C-24	0281-01-100500	100-240	0-30	500	1,45	80	130	139
D-IPS 1000C-24	0281-01-101000	100-240	0-30	1000	3,80	260	130	139
D-IPS 1000/3-C-24	0281-01-301000	3AC 380-500	0-30	1000	3,80	260	130	139

Model	Art-No.	Input [VAC]	Output [VDC]	Power [W]	Weight [kg]	Dimensions [mm]		
						B	T	H
D-IPS 250C-60	0281-02-100250	100-240	0-65	250	1,20	80	130	139

General characteristics:

- max battery charging current adjustable
- deep discharge protection
- electronical battery short circuit proof
- RS232 interface
- signalling via LED's , relays, and digital I / O
- fault diagnostic (battery temperature, aging, cable break etc.
- for all current lead acid batteries (standard, AGM,Gel,Reinblei)
- thermal battery management including cylical monitoring
- additional data für D-IPS-IBM, look at construction series

Standards:

EN 60950	information technology equipment
EN 55011 Class B	industrial, scientific and medical devices
EN 6100-3-2	electromagnetic compatibility (EMV), limits for harmonic currents
EN 6100-6-2	electromagnetic compatibility (EMV), interference immunity of manufactoring locations
EN 61204-3	low voltage power supplies with direct current

CE

D-IPS-BM (ACS charging method)

Model	Art.-No.	Input [VDC]	Output [VDC]	Power [W]	Weight [kg]	Dimensions [mm]		
						B	T	H
D-IPS-BM24-20	0283-01-000020	24	22-30	500	0,60	60	130	139

D-IPS-IBM (ACS charging method with integrated power supply)

Model	Art.-No.	Input [VAC]	Output [VDC]	Power [W]	Weight [kg]	Dimensions [mm]		
						B	T	H
D-IPS-IBM150-24	0283-03-000150	100-240	20-30	150	1,30	98	130	139
D-IPS-IBM250-24	0283-03-000250	100-240	20-30	250	1,60	119	130	139
D-IPS-IBM500-24	0283-03-000500	100-240	20-30	500	1,90	119	130	139

General characteristics:

- protection against: short circuit, overload, over voltage
- power on LED
- active PFC 100W
- potential free contact for DC-OK
- convection cooling
- Output voltage adjustable

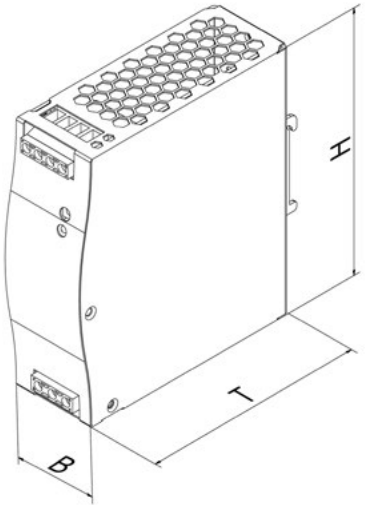

Standards:

EN 60950-1
EN 55022
EN 61000-3-2, 3
EN 61000-4-2,3,4,5,6,8,11
EN 61204-3
EN 61000-6-2
UL 508

Output voltage DC 12V

Model	Art.-No.	Input [VAC]	Output [VDC]	Power [W]	Weight [kg]	Dimensions [mm]		
						B	T	H
MDR 10-12	0290-01-000010	85-264	12	10	0,19	23	100	90
MDR 20-12	0290-01-000020	85-264	12	20	0,21	23	100	90
MDR 40-12	0290-01-000040	85-264	12	40	0,33	40	100	90
MDR 60-12	0290-01-000060	85-264	12	60	0,36	40	100	90
MDR 100-12	0290-01-000100	85-264	12	100	0,46	55	100	90
SDR 75-12	0290-01-000075	88-264	12	75	0,51	32	126	102
SDR 120-12	0290-01-000120	88-264	12	120	0,67	40	126	114

Output voltage DC 24V

Model	Art.-No.	Input [VAC]	Output [VDC]	Power [W]	Weight [kg]	Dimensions [mm]		
						B	T	H
MDR 10-24	0290-02-000010	85-264	24	10	0,19	23	100	90
MDR 20-24	0290-02-000020	85-264	24	20	0,21	23	100	90
MDR 40-24	0290-02-000040	85-264	24	40	0,33	40	100	90
MDR 60-24	0290-02-000060	85-264	24	60	0,36	40	100	90
MDR 100-24	0290-02-000100	85-264	24	100	0,46	55	100	90
SDR 75-24	0290-02-000075	88-264	24	75	0,51	32	126	102
SDR 120-24	0290-02-000120	88-264	24	120	0,67	40	126	114
SDR 240-24	0290-02-000240	88-264	24	240	1,03	63	126	114
SDR 480-24	0290-02-000480	90-264	24	480	1,60	86	126	129
SDR 960-24	0290-02-000960	180-264	24	960	2,47	110	126	150

Output voltage DC 48V

Model	Art.-No.	Input [VAC]	Output [VDC]	Power [W]	Weight [kg]	Dimensions [mm]		
						B	T	H
MDR 40-48	0290-03-000040	85-264	48	40	0,33	40	100	90
MDR 60-48	0290-03-000060	85-264	48	60	0,36	40	100	90
MDR 100-48	0290-03-000100	85-264	48	100	0,46	55	100	90
SDR 75-48	0290-03-000075	88-264	48	75	0,51	32	126	102
SDR 120-48	0290-03-000120	88-264	48	120	0,67	40	126	114
SDR 240-48	0290-03-000240	88-264	48	240	1,03	63	126	114
SDR 480-48	0290-03-000480	90-264	48	480	1,60	86	126	129
SDR 960-48	0290-03-000960	180-264	48	960	2,47	110	126	150

General characteristics:

- protection against: short circuit, overload, over voltage, over temperature
- power on LED
- active PFC 100W
- potential free contact for DC-OK
- convection cooling
- Output voltage adjustable

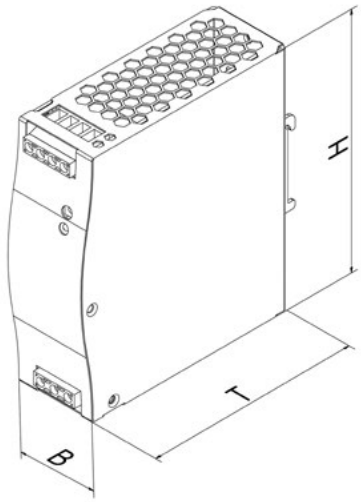

Standards:

EN 60950-1
EN 55022
EN 61000-3-2, 3
EN 61000-4-2,3,4,5,6,8,11
EN 61204-3
EN 61000-6-2
UL 508

Output voltage DC 12V

Model	Art.-No.	Input [VAC]	Output [VDC]	Power [W]	Weight [kg]	Dimensions [mm]		
						B	T	H
WDR 120-12	0291-01-000120	180-550	12	120	0,70	40	114	126

Output voltage DC 24V

Model	Art.-No.	Input [VAC]	Output [VDC]	Power [W]	Weight [kg]	Dimensions [mm]		
						B	T	H
WDR 120-24	0291-02-000120	180-550	24	120	0,70	40	114	126
WDR 240-24	0291-02-000240	180-550	24	240	1,15	63	114	126
WDR 480-24	0291-02-000480	180-550	24	480	1,90	86	129	126

Output voltage DC 48V

Model	Art.-No.	Input [VAC]	Output [VDC]	Power [W]	Weight [kg]	Dimensions [mm]		
						B	T	H
WDR 120-48	0291-03-000120	180-550	48	120	0,70	40	114	126
WDR 240-48	0291-03-000240	180-550	48	240	1,15	63	114	126
WDR 480-48	0291-03-000480	180-550	48	480	1,90	86	129	126

General characteristics:

- protection against: short circuit, overload, over voltage, over temperature
- power on LED
- potential free contact for DC-OK
- convection cooling
- Output voltage adjustable

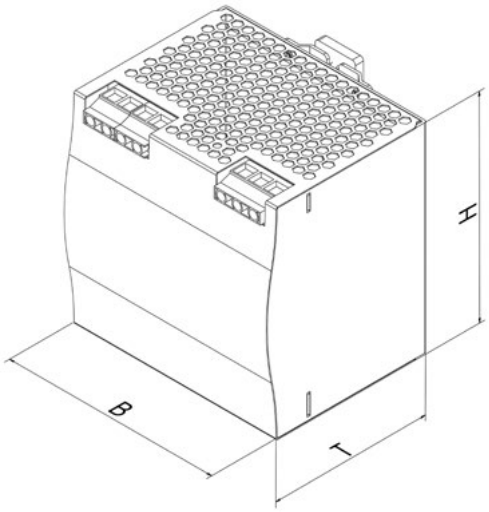

Standards:

EN 60950-1
EN 55022
EN 61000-3-2, 3
EN 61000-4-2,3,4,5,6,8,11
EN 61204-3
EN 61000-6-2
UL 508

Output voltage DC 24V

Model	Art.-No.	Input [VAC]	Output [VDC]	Power [W]	Weight [kg]	Dimensions [mm]		
						B	T	H
DRH 120-24	0292-01-000120	3AC 340 -550	24	120	0,80	66	100	126
DRT 240-24	0292-01-000240	3AC 340 -550	24	240	1,40	126	100	126
DRT 480-24	0292-01-000480	3AC 340 -550	24	480	2,70	227	100	126
DRT 960-24	0292-01-000960	3AC 340 -550	24	960	3,60	276	100	126

Output voltage DC 48V

Model	Art.-No.	Input [VAC]	Output [VDC]	Power [W]	Weight [kg]	Dimensions [mm]		
						B	T	H
DRH 120-48	0292-02-000120	3AC 340 -550	48	120	0,80	66	100	126
DRH 240-48	0292-02-000240	3AC 340 -550	48	240	1,40	126	100	126
DRH 480-48	0292-02-000480	3AC 340 -550	48	480	2,70	227	100	126
DRH 960-48	0292-02-000960	3AC 340 -550	48	960	3,60	276	100	126

DR-RDN	Redundancy module	20 A

General characteristics:

- redundancy module for 24VDC
- power on LED
- potential free contact for DC-OK
- convection cooling

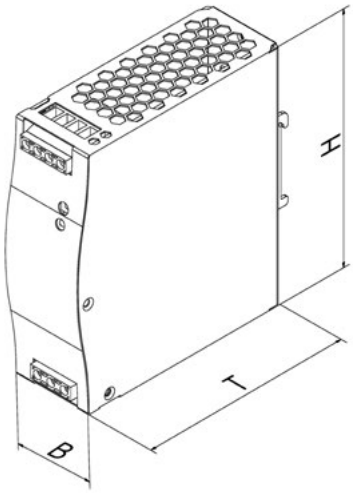

Standards:

EN 55022
EN 61000-3-2, 3
EN 61000-4-2,3,4,5,6,8,11
UL 508

Model	Art.-No.	Input [VAC]	Output [VDC]	Power [W]	Weight [kg]	Dimensions [mm]		
						B	T	H
DR-RDN20	0294-01-000020	21-28	24	480	0,50	56	100	126

DR-UPS	Uninteruptible power supply, low cost	960 W

General characteristics:

- Battery charging current 2A
- integrated battery test function
- reverse polarity protection
- centralised alarm contact
- signaling via LEDs
- external Batteries: 24V, 4Ah / 7Ah / 12Ah

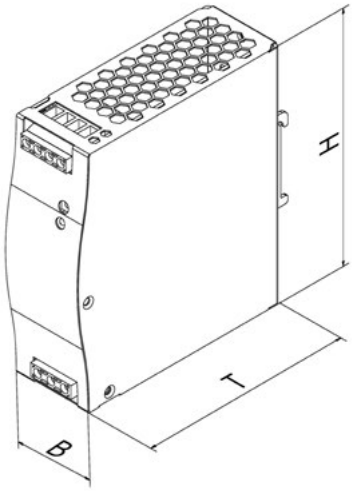

Standards:

Output voltage DC 24V

Model	Art.-No.	Input [VAC]	Output [VDC]	Power [W]	Weight [kg]	Dimensions [mm]		
						B	T	H
DR-UPS 40	0293-01-000040	24	22-30	960	0,55	56	100	126

6 | ENCLOSURES AND ACCESSORIES

All electrical equipment can be manufactured in different types of protection , this also applies to transformers. Protection refers to the scope of the protection through a housing against access to dangerous parts , also against ingress of solid foreign objects and / or against the ingress of water.

Arrangement of IP codes:

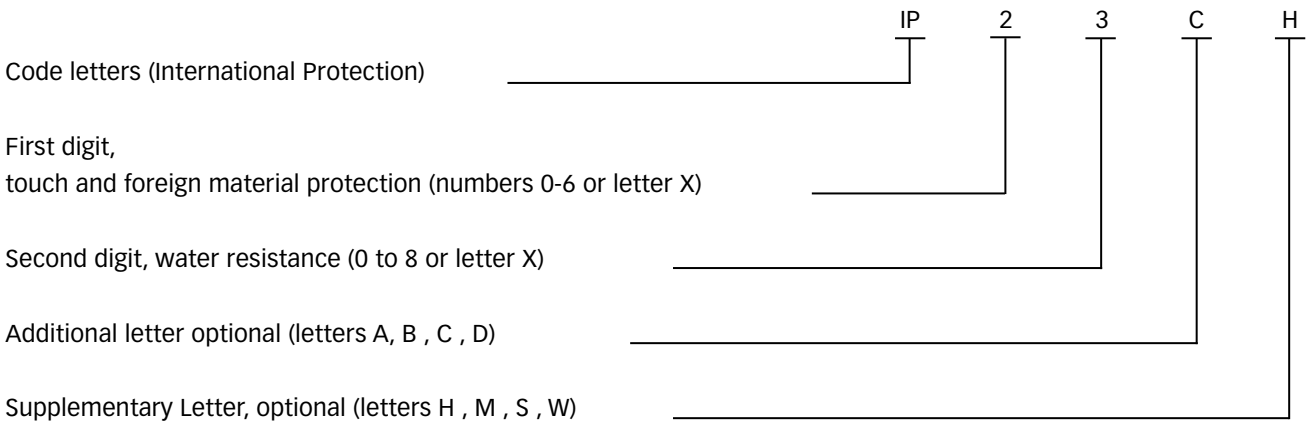

Where the code number is doesn't have to be specified or can be specified, it has to be replaced by the letter X (" XX " if both figures are omitted).

Significance of the additional letters:

Additional letter (optional):
A – Protection against access to dangerous parts with back of the hand
B – Protection against access to dangerous parts ,finger
C – Protection against access to dangerous parts, tool
D – Protection against access to dangerous parts, wire

Supplementary letter (optional):
H – Additional Information especially for high voltage devices
M – Additional information especially for movement during water testing
S – Additional information especiallyo a standstill during water testing
W – Additional Information especially for weather conditions

Contact and foreign body protection (1st digit)

IP 0 __ not protected

IP 1 __ protected against solid objects greater than 50 mm

IP 2 __ protected against solid objects greater than 12,5 mm

IP 3 __ protected against solid objects greater than 2,5 mm

IP 4 __ protected against solid objects greater than 1 mm

IP 5 __ dustproof

IP 6 __ dustproof

Water protection (2nd digit)

IP __ 0 not protected

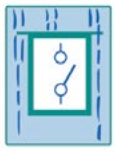

IP __ 1 protected against dripping water

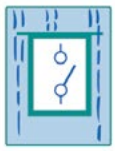

IP __ 2 protected against water drops, when the enclosure is tilted up to 15°

IP __ 3 protected against spraywater

IP __ 4 splashproof

IP __ 5 protected against water jets

IP __ 6 protected against powerful water jets

IP __ 7 protected from the effects during temporary submersion in water

IP __ 8 protected against the effects if continual submersion in water

General characteristics:

- sheet stell housing for small transformers
- IP23
- standing version
- powder-coated in RAL 7035
- other sizes and colors available on request

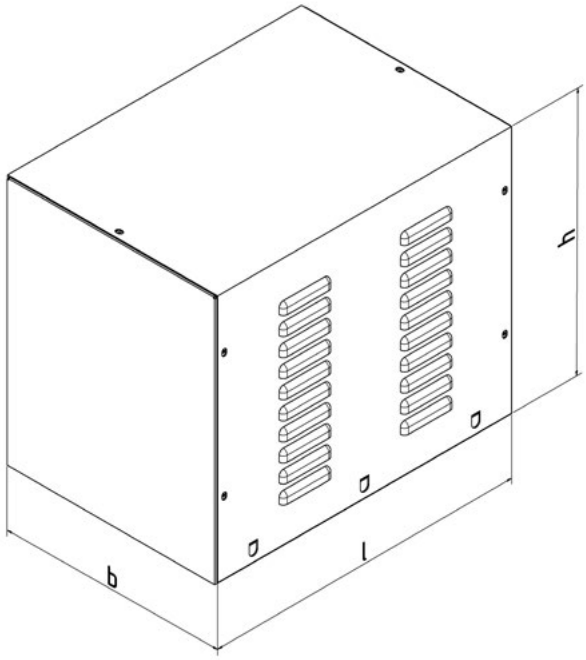

CE

Model	Art.-No.	Weight [kg]	Dimensions [mm]		
			l	b	h
BG 20 S	0141-01-000020	0,67	118	90	110
BG 21 S	0141-01-000021	0,92	138	110	130
BG 22 S	0141-01-000022	1,21	158	130	150
BG 23 S	0141-01-000023	2,24	198	160	200
BG 24 S	0141-01-000024	2,61	248	180	180
BG 25 S	0141-01-000025	3,79	298	220	220
BG 26 S	0141-01-000026	5,61	358	250	300
BG 27 S	0141-01-000027	7,02	398	280	280
BG 28 S	0141-01-000028	10,1	478	350	300
BG 29 S	0141-01-000029	11,9	558	380	300

General characteristics:

- sheet steal housing for small transformers
- IP23
- wall mounting
- powder-coated in RAL 7035
- other sizes and colors available on request

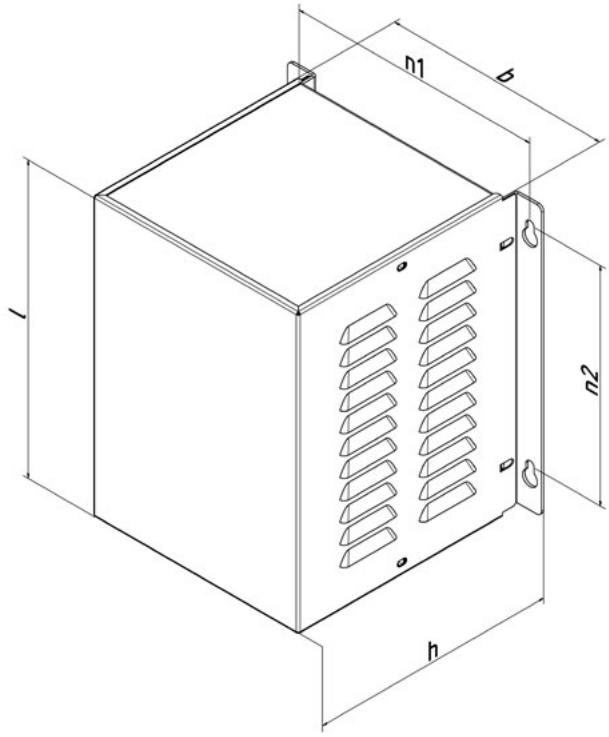

CE

Model	Art.-No.	Weight [kg]	Dimensions [mm]				
			l	b	h	n1	n2
BG 20 W	0141-02-000020	0,67	118	90	110	115	82
BG 21 W	0141-02-000021	0,92	138	110	130	135	102
BG 22 W	0141-02-000022	1,21	158	130	150	155	122
BG 23 W	0141-02-000023	2,24	198	160	200	185	162
BG 24 W	0141-02-000024	2,61	248	180	180	205	212
BG 25 W	0141-02-000025	3,79	298	220	220	245	262
BG 26 W	0141-02-000026	5,61	358	250	300	280	322
BG 27 W	0141-02-000027	7,02	398	280	280	310	362
BG 28 W	0141-02-000028	10,1	478	350	300	380	4425
BG 29 W	0141-02-000029	11,9	558	380	300	410	552

General characteristics:

- material: glass fiber reinforced polyester resin
- self-extinguishing, not hygroscopic
- neoprene compression between housing and lid
- thermal stability -32°C to 220°C
- IP67
- standard color, yellow

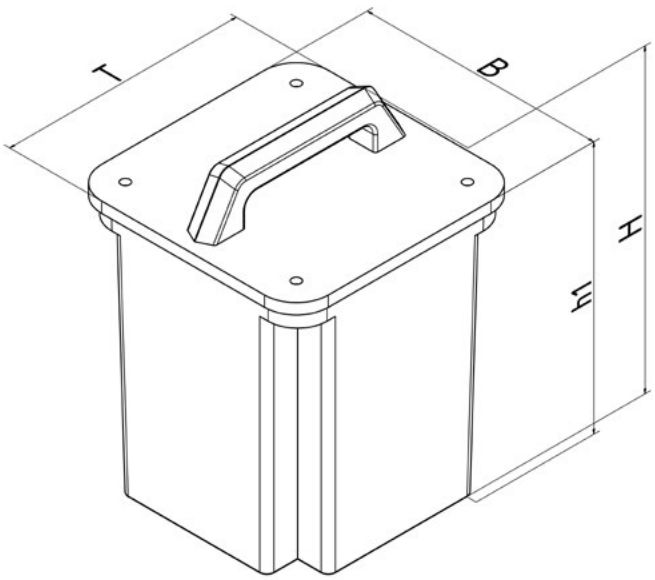

CE

Model	Art.-No.	Weight [kg]	Dimensions [mm]			
			B	T	H	h1
BG 601	0143-01-000601	1,20	166	166	219	176
BG 701	0143-01-000701	1,80	192	192	259	217
BG 801	0143-01-000801	4,20	310	265	---	280

General characteristics:

- sheet steal housing for large transformers
- IP23 or IP54
- powder-coated in RAL 7035
- other sizes and colors available on request

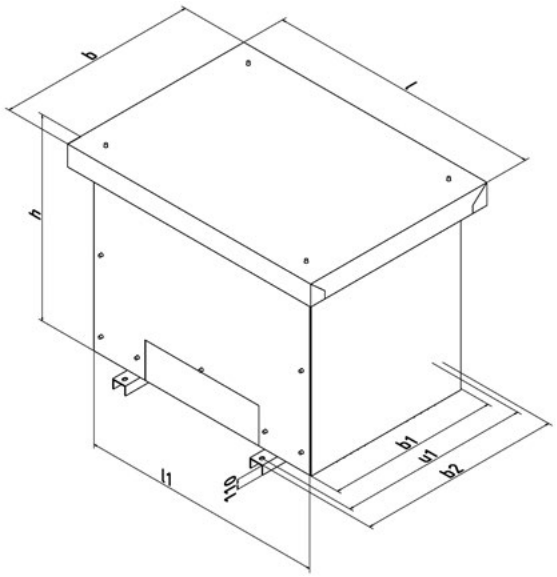

CE

BBG (IP23)

Model	Art.-No.	Weight [kg]	Dimensions [mm]						
			l	l1	b	b1	b2	h	u1
BBG 110	0141-03-000110	22,0	550	460	490	400	500	495	460
BBG 120	0141-03-000120	27,0	610	520	540	450	550	575	510
BBG 130	0141-03-000130	19,5	610	520	430	340	440	435	400
BBG 140	0141-03-000140	25,0	670	580	490	400	500	495	460
BBG 150	0141-03-000150	31,0	770	680	540	450	550	575	510
BBG 160	0141-03-000160	42,0	855	765	620	530	630	635	590
BBG 170	0141-03-000170	58,0	1050	960	750	660	760	705	720
BBG 180	0141-03-000180	74,0	1150	1060	850	760	860	815	820
BBG 190	0141-03-000190	112	1340	1250	850	760	860	1265	820
BBG 210	0141-03-000210	39,0	750	660	580	490	590	605	550
BBG 220	0141-03-000220	56,0	840	750	490	400	500	815	460
BBG 230	0141-03-000230	48,0	940	850	640	550	650	745	610
BBG 240	0141-03-000240	73,0	1090	1000	590	500	600	1015	560
BBG 250	0141-03-000250	104	1290	1200	790	700	800	1115	760

BBG (IP54)

Model	Art.-No.	Weight [kg]	Dimensions [mm]						
			l	l1	b	b1	b2	h	u1
BBG 110	0141-04-000110	23,0	550	460	490	400	500	495	460
BBG 120	0141-04-000120	28,0	610	520	540	450	550	575	510
BBG 130	0141-04-000130	20,0	610	520	430	340	440	435	400
BBG 140	0141-04-000140	26,0	670	580	490	400	500	495	460
BBG 150	0141-04-000150	32,0	770	680	540	450	550	575	510
BBG 160	0141-04-000160	44,0	855	765	620	530	630	635	590
BBG 170	0141-04-000170	60,0	1050	960	750	660	760	705	720
BBG 180	0141-04-000180	77,0	1150	1060	850	760	860	815	820
BBG 190	0141-04-000190	116	1340	1250	850	760	860	1265	820
BBG 210	0141-04-000210	41,0	750	660	580	490	590	605	550
BBG 220	0141-04-000220	58,0	840	750	490	400	500	815	460
BBG 230	0141-04-000230	50,0	940	850	640	550	650	745	610
BBG 240	0141-04-000240	76,0	1090	1000	590	500	600	1015	560
BBG 250	0141-04-000250	109	1290	1200	790	700	800	1115	760

General characteristics:

- sheet steal housing for large transformers
- IP23
- powder-coated in RAL 7035
- other sizes and colors available on request

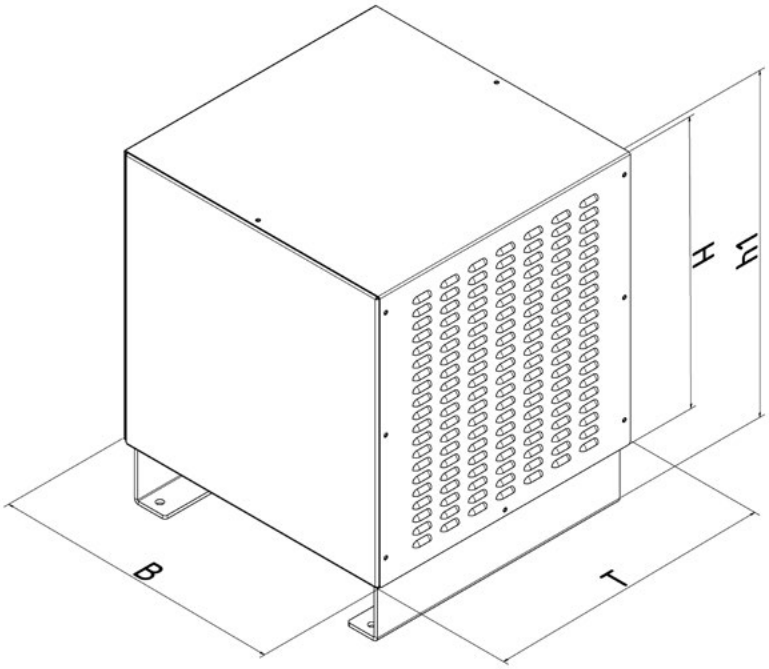

CE

Model	Art.-No.	Weight [kg]	Dimensions [mm]			
			B	T	H	h1
BBG 400	0141-05-000400	28,0	400	400	400	500
BBG 500	0141-05-000500	38,0	500	500	500	600
BBG 650	0141-05-000600	60,0	650	650	650	750

General characteristics:

- control cabinet
- IP55 (NEMA12), without fan or installations
- powder-coated in RAL 7035
- including 100mm socket and sidewalls
- other sizes and colors available on request

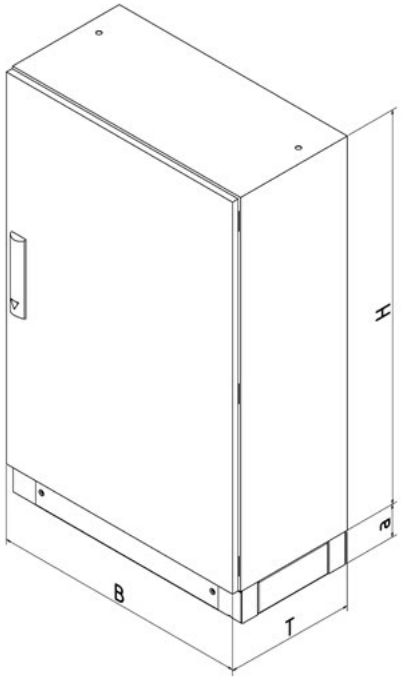

CE

Model	Art.-No.	IP	Doors	Weight [kg]	Dimensions [mm]			
					B	H	T	a
BSS 5110	1000-10-005110	55	1	44,0	600	800	400	100
BSS 5111	1000-10-005111	55	1	54,0	600	1000	400	100
BSS 5112	1000-10-005112	55	1	57,0	600	1200	300	100
BSS 5113	1000-10-005113	55	1	61,0	600	1200	400	100
BSS 5114	1000-10-005114	55	1	62,0	800	1000	300	100
BSS 5115	1000-10-005115	55	1	66,0	800	1000	400	100
BSS 5116	1000-10-005116	55	1	70,0	800	1200	300	100
BSS 5117	1000-10-005117	55	1	76,0	800	1200	400	100
BSS 5118	1000-10-005118	55	2	75,0	1000	1000	300	100
BSS 5119	1000-10-005119	55	2	87,0	1000	1200	300	100
BSS 5120	1000-10-005120	55	2	91,0	1000	1200	400	100
BSS 5121	1000-10-005121	55	2	100	1000	1400	300	100
BSS 5122	1000-10-005122	55	2	105	1000	1400	400	100
BSS 5123	1000-10-005123	55	2	107	1200	1200	400	100
BSS 8615	1000-10-008615	55	1	100	600	1200	500	100
BSS 8815	1000-10-008815	55	1	117	800	1200	500	100
BSS 8215	1000-10-008215	55	2	165	1200	1200	500	100
BSS 8645	1000-10-008645	55	1	111	600	1400	500	100
BSS 8845	1000-10-008845	55	1	133	800	1400	500	100
BSS 8245	1000-10-008245	55	2	189	1200	1400	500	100
BSS 8665	1000-10-008665	55	1	125	600	1600	500	100
BSS 8865	1000-10-008865	55	1	128	800	1600	500	100
BSS 8265	1000-10-008265	55	2	184	1200	1600	500	100
BSS 8686	1000-10-008686	55	1	122	600	1800	600	100
BSS 8886	1000-10-008886	55	1	145	800	1800	600	100
BSS 8286	1000-10-008286	55	2	205	1200	1800	600	100
BSS 8606	1000-10-008606	55	1	129	600	2000	600	100
BSS 8806	1000-10-008806	55	1	156	800	2000	600	100
BSS 8006	1000-10-008006	55	2	186	1000	2000	600	100
BSS 8206	1000-10-008206	55	2	220	1200	2000	600	100
BSS 8608	1000-10-008608	55	1	136	600	2000	800	100
BSS 8808	1000-10-008808	55	1	162	800	2000	800	100
BSS 8208	1000-10-008208	55	2	228	1200	2000	800	100

Accessories, Cable glands

General characteristics:

- cable glands
- metric
- plastic or metal
- EMC cable gland on request

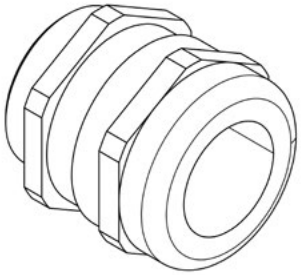

Plastic - PA

Model	Art.-No.	Sealing area [mm]
M12 PA	0190-02-000012	3 - 7
M16 PA	0190-02-000016	4,5 - 10
M20 PA	0190-02-000020	6 - 13
M25 PA	0190-02-000025	9 - 17
M32 PA	0190-02-000032	18 - 25
M40 PA	0190-02-000040	16 - 28
M50 PA	0190-02-000050	21 - 35
M63 PA	0190-02-000063	34 - 48

Metal - FE

Model	Art.-No.	Sealing area [mm]
M12 FE	0190-01-000012	3 - 7
M16 FE	0190-01-000016	4,5 - 10
M20 FE	0190-01-000020	6 - 13
M25 FE	0190-01-000025	9 - 17
M32 FE	0190-01-000032	18 - 25
M40 FE	0190-01-000040	16 - 28
M50 FE	0190-01-000050	21 - 35
M63 FE	0190-01-000063	34 - 48

Accessories, Filter fan

General characteristics:

- filter fan and filter
- IP54 with filter mat
- 230 VAC 50/60 Hz
- 115 VAC oder 24 DC versions available on request
- EMC versions available on request

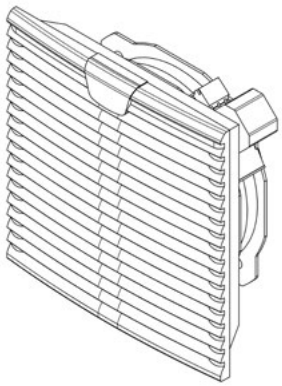

Filter fan

Model	Art.-No.	Air flow [m³/h]	Dimensions [mm]		
			B	H	T
SK 3237.100	0140-04-003237	15	116,5	116,5	43
SK 3238.100	0140-04-003238	43	148,5	148,5	58,5
SK 3239.100	0140-04-003239	98	204	204	90
SK 3240.100	0140-04-003240	138	255	255	107
SK 3241.100	0140-04-003241	183	255	255	107
SK 3243.100	0140-04-003243	440	323	323	118,5
SK 3244.100	0140-04-003244	544	323	323	130,5

Austrittsfilter

Model	Art.-No.	Air flow [m³/h]	Dimensions [mm]		
			B	H	T
SK 3237.200	0140-05-003237	15	116,5	116,5	---
SK 3238.200	0140-05-003238	43	148,5	148,5	---
SK 3239.200	0140-05-003239	98	204	204	---
SK 3240.200	0140-05-003240	138	255	255	---
SK 3243.200	0140-05-003243	440	323	323	---

The details of the amount of air relate to the particular use of a filter fan and the corresponding outlet filter.

Accessories, Socket

General characteristics:

- heavy duty socket
- powder-coated in RAL 7035
- kit consisting 2 units
- other sizes and colors available on request

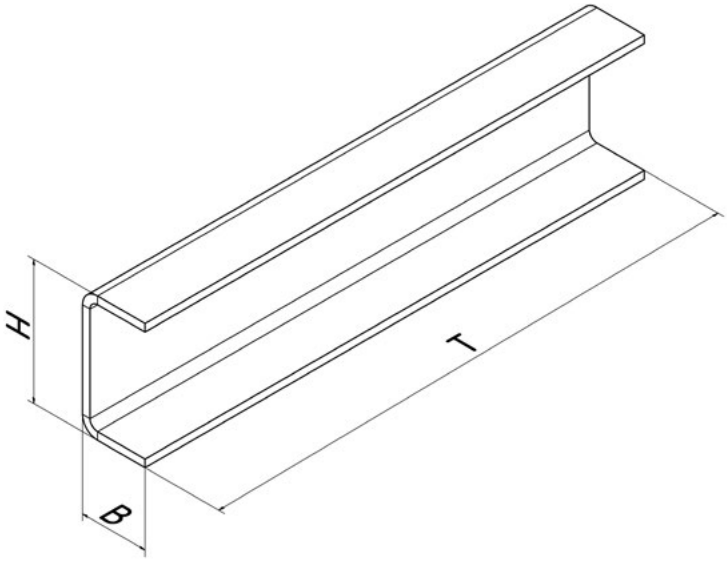

Model	Art.-No.	Weight [kg]	Dimensions [mm]		
			B	T	H
BZBS 100-400	0141-06-100400	6,80	50	400	100
BZBS 100-500	0141-06-100500	8,60	50	500	100
BZBS 100-600	0141-06-100600	10,2	50	600	100
BZBS 100-800	0141-06-100800	13,6	50	800	100
BZBS 200-400	0141-06-200400	17,2	75	400	200
BZBS 200-500	0141-06-200500	21,6	75	500	200
BZBS 200-600	0141-06-200600	25,8	75	600	200
BZBS 200-800	0141-06-200800	34,4	75	800	200

Accessories, cabinet roles

General characteristics:

- heavy duty cabinet roles
- casters or fixed casters for heavy loads
- other sizes an weights available on request

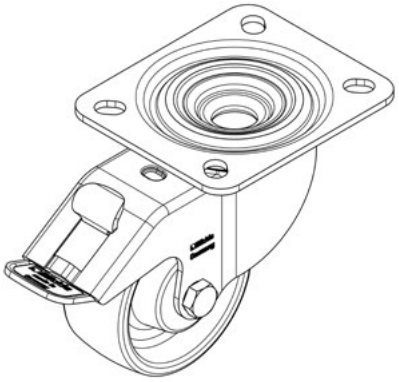

Model	Art.-No.	Capacity/role [kg]	Dimensions [mm]				Covering	Kind
			B	T	H	Ø		
B-PO75R	0142-01-000001	200	85	100	100	75	PA	Bock
L-PO75R-FI	0142-01-000002	200	85	100	100	75	PA	Lenk
BH-GTH 100K-1	0142-01-000003	400	85	100	140	100	PU	Bock
LH-GTH 100K-1-FI	0142-01-000004	400	85	100	140	100	PU	Lenk
BH-GB 125K-1	0142-01-000005	500	85	100	165	125	PU	Bock
LH-GB 125K-1-FI	0142-01-000006	500	85	100	165	125	PU	Lenk

Notes

7 | ELECTRICAL ACESSORIES

Main switch — 20 - 250 A

General characteristics:

- main switch, service switch
- central attachment or fasten front panel (depending on size)
- black version (main and service switch)
- red / yellow version (main switch with emergency stop)
- other currents and versions available on request

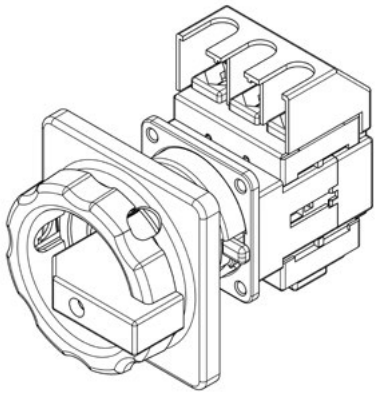

Model	Art.-No.	Current [A]	Color	Poles	Voltage [V]	Dimensions [mm]		
						B	H	T
HLT20/3ZM/Z33	0250-01-000001	20	schwarz	3	690	66	66	50
HLT40/3ZM/Z33	0250-01-000002	40	schwarz	3	690	66	66	50
HLT63/3ZM/Z33	0250-01-000003	63	schwarz	3	690	66	66	74
HLT100/3E/Z33	0250-01-000004	100	schwarz	3	690	66	66	74
HLT180/3E/Z33	0250-01-000005	180	schwarz	3	690	94	94	93
HLT250/3E/Z33	0250-01-000006	250	schwarz	3	690	94	94	110
NLT20/3ZM/Z33	0250-02-000001	20	rot/gelb	3	690	66	66	50
NLT40/3ZM/Z33	0250-02-000002	40	rot/gelb	3	690	66	66	50
NLT63/3ZM/Z33	0250-02-000003	63	rot/gelb	3	690	66	66	74
NLT100/3E/Z33	0250-02-000004	100	rot/gelb	3	690	66	66	74
NLT180/3E/Z33	0250-02-000005	180	rot/gelb	3	690	94	94	93
NLT250/3E/Z33	0250-02-000006	250	rot/gelb	3	690	94	94	110

Transformer protection switch — 4 - 25 A

General characteristics:

- transformer protection switch
- thermomagnetic actuator
- overload actuator adjustable
- top hat rail mounting
- other currents available on request

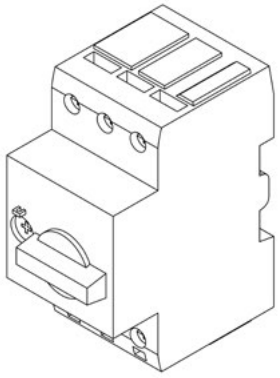

Model	Art.-No.	Current [A]	Poles	Voltage [V]	Dimensions [mm]		
					B	H	T
PKZM 0-6,3-T	0234-01-000001	4 - 6,3	3	690	45	93	76
PKZM 0-10-T	0234-01-000002	6,3 - 10	3	690	45	93	76
PKZM 0-12-T	0234-01-000003	8 - 12	3	690	45	93	76
PKZM 0-16-T	0234-01-000004	10 - 16	3	690	45	93	76
PKZM 0-20-T	0234-01-000005	16 - 20	3	690	45	93	76
PKZM 0-25-T	0234-01-000006	20 - 25	3	690	45	93	76

Motor protection switch — 4-65 A

General characteristics:

- motor protection switch
- thermomagnetic actuator
- overload actuator adjustable
- top hat rail mounting
- other currents available on request

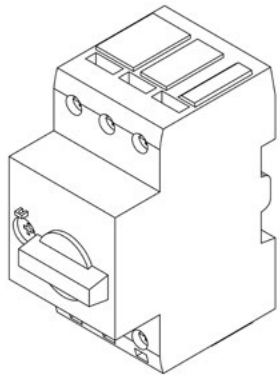

Model	Art.-No.	Current [A]	Poles	Voltage [V]	Dimensions [mm]		
					B	H	T
PKZM 0-6,3	0233-01-000001	4 - 6,3	3	690	45	93	76
PKZM 0-10	0233-01-000002	6,3 - 10	3	690	45	93	76
PKZM 0-12	0233-01-000003	8 - 12	3	690	45	93	76
PKZM 0-16	0233-01-000004	10 - 16	3	690	45	93	76
PKZM 0-20	0233-01-000005	16 - 20	3	690	45	93	76
PKZM 0-25	0233-01-000006	20 - 25	3	690	45	93	76
PKZM 0-32	0233-01-000007	25 - 32	3	690	45	93	76
PKZM 4-40	0233-01-000008	32 - 40	3	690	55	140	160
PKZM 4-50	0233-01-000009	40 - 50	3	690	55	140	160
PKZM 4-58	0233-01-000010	50 - 58	3	690	55	140	160
PKZM 4-63	0233-01-000011	55 - 65	3	690	55	140	160

Circuit breaker — 50 - 300 A

General characteristics:

- power circuit breaker
- thermomagnetic actuator
- overload actuator adjustable
- short circuit release set
- switching capacity 25kA
- other sizes on request

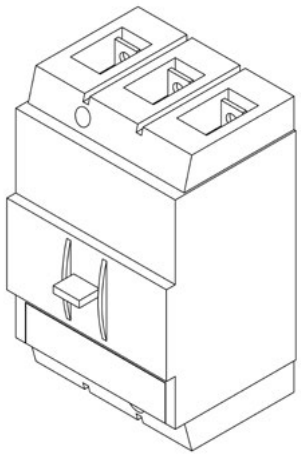

Door coupling rotary handles

Model	Art.-No.	Color
NZM1-XTVDVR	0232-04-000001	rot/gelb
NZM2-XTVDVR	0232-04-000002	rot/gelb
NZM1-XTVD	0232-04-000003	schwarz
NZM2-XTVD	0232-04-000004	schwarz

Model	Art.-No.	Current [A]	Poles	Voltage [V]	Dimensions [mm]		
					B	H	T
NZMB1-A63	0232-02-000001	50 - 63	3	690	90	265	85
NZMB1-A80	0232-02-000002	63 - 80	3	690	90	265	85
NZMB1-A100	0232-02-000003	80 - 100	3	690	90	265	85
NZMB1-A125	0232-02-000004	100 - 125	3	690	90	265	85
NZMB1-A160	0232-02-000005	125 - 160	3	690	90	265	85
NZMB2-A200	0232-02-000006	160 - 200	3	690	115	276	149
NZMB2-A250	0232-02-000007	200 - 250	3	690	115	276	149
NZMB2-A300	0232-02-000008	240 - 300	3	690	115	276	149

General characteristics:

- miniature circuit breaker
- top hat rail mounting
- B/C characteristics
- 1 and 3 pole version
- switching capacity 15kA
- other currents and characteristics available on request

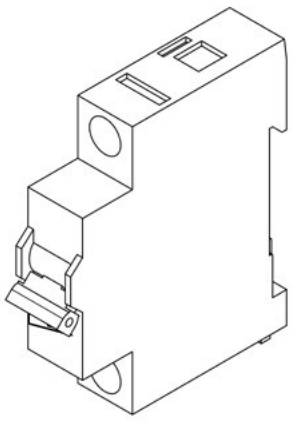

Model	Art.-No.	Current [A]	Poles	Voltage [V]	Dimensions [mm]		
					B	H	T
FAZ-B6/1	0230-02-000001	6	1	230/400	17,5	80	71
BAZ-B10/1	0230-02-000002	10	1	230/400	17,5	80	71
FAZ-B13/1	0230-02-000003	13	1	230/400	17,5	80	71
FAZ-B16/1	0230-02-000004	16	1	230/400	17,5	80	71
FAZ-B20/1	0230-02-000005	20	1	230/400	17,5	80	71
FAZ-B25/1	0230-02-000006	25	1	230/400	17,5	80	71
FAZ-B32/1	0230-02-000007	32	1	230/400	17,5	80	71
FAZ-B40/1	0230-02-000008	40	1	230/400	17,5	80	71
FAZ-B50/1	0230-02-000009	50	1	230/400	17,5	80	71
FAZ-B63/1	0230-02-000010	63	1	230/400	17,5	80	71
FAZ-B6/3	0230-02-000011	6	3	230/400	52,5	80	71
FAZ-B10/3	0230-02-000012	10	3	230/400	52,5	80	71
FAZ-B13/3	0230-02-000013	13	3	230/400	52,5	80	71
FAZ-B16/3	0230-02-000014	16	3	230/400	52,5	80	71
FAZ-B20/3	0230-02-000015	20	3	230/400	52,5	80	71
FAZ-B25/3	0230-02-000016	25	3	230/400	52,5	80	71
FAZ-B32/3	0230-02-000017	32	3	230/400	52,5	80	71
FAZ-F40/3	0230-02-000018	40	3	230/400	52,5	80	71
FAZ-B50/3	0230-02-000019	50	3	230/400	52,5	80	71
FAZ-B63/3	0230-02-000020	63	3	230/400	52,5	80	71

Model	Art.-No.	Current [A]	Poles	Voltage [V]	Dimensions [mm]		
					B	H	T
FAZ-C6/1	0230-03-000001	6	1	230/400	17,5	80	71
BAZ-C10/1	0230-03-000002	10	1	230/400	17,5	80	71
FAZ-C13/1	0230-03-000003	13	1	230/400	17,5	80	71
FAZ-C16/1	0230-03-000004	16	1	230/400	17,5	80	71
FAZ-C20/1	0230-03-000005	20	1	230/400	17,5	80	71
FAZ-C25/1	0230-03-000006	25	1	230/400	17,5	80	71
FAZ-C32/1	0230-03-000007	32	1	230/400	17,5	80	71
FAZ-C40/1	0230-03-000008	40	1	230/400	17,5	80	71
FAZ-C50/1	0230-03-000009	50	1	230/400	17,5	80	71
FAZ-C63/1	0230-03-000010	63	1	230/400	17,5	80	71
FAZ-C6/3	0230-03-000011	6	3	230/400	52,5	80	71
FAZ-C10/3	0230-03-000012	10	3	230/400	52,5	80	71
FAZ-C13/3	0230-03-000013	13	3	230/400	52,5	80	71
FAZ-C16/3	0230-03-000014	16	3	230/400	52,5	80	71
FAZ-C20/3	0230-03-000015	20	3	230/400	52,5	80	71
FAZ-C25/3	0230-03-000016	25	3	230/400	52,5	80	71
FAZ-C32/3	0230-03-000017	32	3	230/400	52,5	80	71
FAZ-C40/3	0230-03-000018	40	3	230/400	52,5	80	71
FAZ-C50/3	0230-03-000019	50	3	230/400	52,5	80	71
FAZ-C63/3	0230-03-000020	63	3	230/400	52,5	80	71

Fuses — up to 1600 A

General characteristics:

- holder and fuses – glass tube 5x20mm
- holder and fuses – glass tube 6,3x32mm
- holder and fuses – D0
- holder and fuses – NH

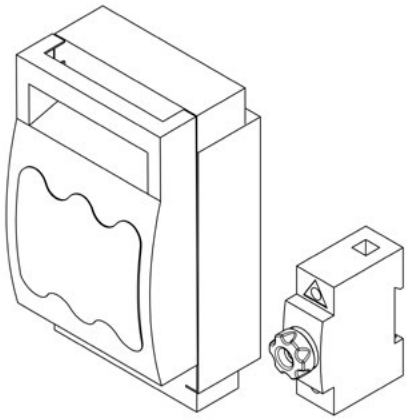

Model	Art.-No.	Current [A]	Poles	Voltage [V]	Dimensions [mm]		
					B	H	T
BZSS 5x20	0234-04-000001	16	1	500	6,2	61,5	62,5
BZSS 6,3x32	0234-05-000001	20	1	500	8,2	76,5	69
BZSS D02-1	0231-03-000001	63	1	500	27	80	55
BZSS D02-3	0231-03-000002	63	3	500	81	80	55
BZSS NH00	0235-01-000001	160	3	690	106	200	83
BZSS NH1	0235-01-000002	250	3	690	184	243	112
BZSS NH2	0235-01-000003	400	3	690	210	288	120
BZSS NH3	0235-01-000004	630	3	690	256	300	143
BZSS NH4a	0235-01-000005	1600	3	690	378	340	265

Connection cables

General characteristics:

- connection cable H07RN-F
- for average mechanical stresses
- halogen-free
- flame retardant
- other cable types , lengths and cross-sections on request

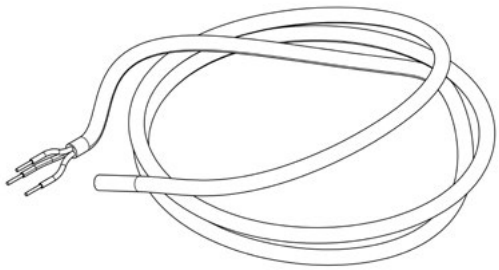

Model	Art.-No.	Current [A]	Wires	Voltage [V]	Length [m]
H07RN-F 3G1,5	1100-10-000001	16	2 + PE	450/750	5
H07RN-F 3G2,5	1100-10-000002	25	2 + PE	450/750	5
H07RN-F 5G1,5	1100-10-000003	16	4 + PE	450/750	5
H07RN-F 5G2,5	1100-10-000004	25	4 + PE	450/750	5
H07RN-F 5G4	1100-10-000005	32	4 + PE	450/750	5
H07RN-F 5G6	1100-10-000006	40	4 + PE	450/750	5
H07RN-F 5G10	1100-10-000007	50	4 + PE	450/750	5
H07RN-F 5G16	1100-10-000008	63	4 + PE	450/750	5
H07RN-F 5G25	1100-10-000009	80	4 + PE	450/750	5
H07RN-F 5G35	1100-10-000010	100	4 + PE	450/750	5

General characteristics:

- analog panel meters
- 96mm
- digital measurement devices, multifunctional power meter, other sizes or values available on request

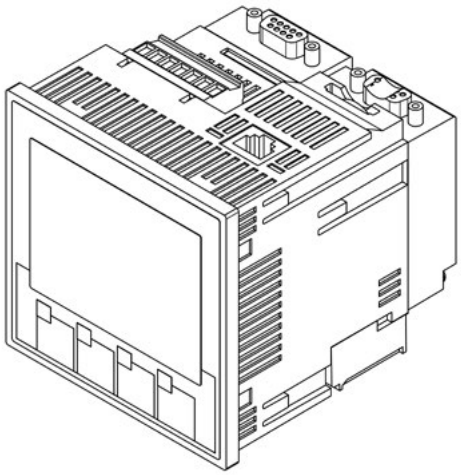

Model	Art.-No.	AC/DC	Current [A]	Voltage [V]	Converter/ shunt	Dimensions [mm]	
						H	T
EQB96-10V	0240-03-000001	AC	---	10	---	96	96
EQB96-60V	0240-03-000002	AC	---	60	---	96	96
EQB96-100V	0240-03-000003	AC	---	100	---	96	96
EQB96-250V	0240-03-000004	AC	---	250	---	96	96
EQB96-300V	0240-03-000005	AC	---	300	---	96	96
EQB96-500V	0240-03-000006	AC	---	500	---	96	96
EQB96-600V	0240-03-000007	AC	---	600	---	96	96
DQB96-10V	0240-04-000001	DC	---	10	---	96	96
DQB96-25V	0240-04-000002	DC	---	25	---	96	96
DQB96-40V	0240-04-000003	DC	---	40	---	96	96
DQB96-60V	0240-04-000004	DC	---	60	---	96	96
DQB96-500V	0240-04-000005	DC	---	500	---	96	96
EQB96-10	0240-01-000001	AC	10 / 20	---	---	96	96
EQB96-15	0240-01-000002	AC	15 / 30	---	---	96	96
EQB96-25	0240-01-000003	AC	25 / 50	---	---	96	96
EQB96-40	0240-01-000004	AC	40 / 80	---	---	96	96
EQB96-60	0240-01-000005	AC	60 / 120	---	---	96	96
EQB96-100	0240-01-000006	AC	100 / 200	---	1A	96	96
EQB96-200	0240-01-000007	AC	200 / 400	---	1A	96	96
DQB96-10	0240-02-000001	DC	10	---	60mV	96	96
DQB96-15	0240-02-000002	DC	15	---	60mV	96	96
DQB96-25	0240-02-000003	DC	25	---	60mV	96	96
DQB96-40	0240-02-000004	DC	40	---	60mV	96	96
DQB96-60	0240-02-000005	DC	60	---	60mV	96	96
DQB96-100	0240-02-000006	DC	100	---	60mV	96	96
DQB96-200	0240-02-000007	DC	200	---	60mV	96	96

General characteristics:

- built in socket
- plugs
- various versions
- other voltages and versions available on request

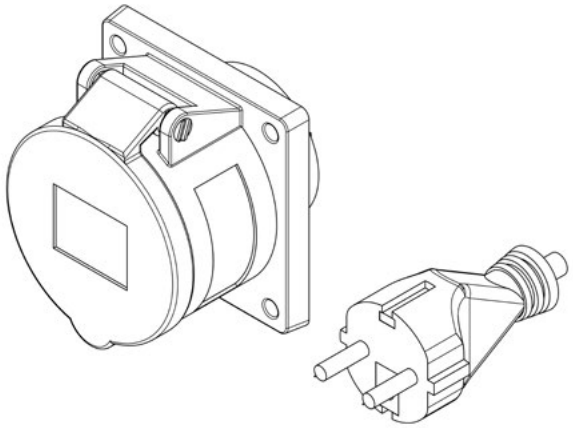

Model	Art.-No.	Current [A]	Color	Poles	Voltage [V]	PE
Dose CEE 400V 16A	0251-01-000001	16	rot	5	400	6h
Dose CEE 400V 32A	0251-01-000002	32	rot	5	400	6h
Dose CEE 400V 63A	0251-01-000003	63	rot	5	400	6h
Dose CEE 230V 16A	0251-01-000004	16	blau	5	230	9h
Dose CEE 230V 32A	0251-01-000005	32	blau	5	230	9h
Dose CEE 230V 63A	0251-01-000006	63	blau	5	230	9h
Dose CEE 500V 16A	0251-01-000007	16	schwarz	5	500	7h
Dose CEE 500V 32A	0251-01-000008	32	schwarz	5	500	7h
Dose CEE 500V 63A	0251-01-000009	63	schwarz	5	500	7h
Dose Schuko 230V 16A	0251-01-000010	16	blau	3	230	---
Dose US 115V 15A	0251-01-000011	15	blau	3	115	---

Model	Art.-No.	Current [A]	Color	Poles	Voltage [V]	PE
Stecker CEE 400V 16A	0252-01-000001	16	rot	5	400	6h
Stecker CEE 400V 32A	0252-01-000002	32	rot	5	400	6h
Stecker CEE 400V 63A	0252-01-000003	63	rot	5	400	6h
Stecker CEE 230V 16A	0252-01-000004	16	blau	5	230	9h
Stecker CEE 230V 32A	0252-01-000005	32	blau	5	230	9h
Stecker CEE 230V 63A	0252-01-000006	63	blau	5	230	9h
Stecker CEE 500V 16A	0252-01-000007	16	schwarz	5	500	7h
Stecker CEE 500V 32A	0252-01-000008	32	schwarz	5	500	7h
Stecker CEE 500V 63A	0252-01-000009	63	schwarz	5	500	7h
Stecker Schuko 230V 16A	0252-01-000010	16	blau	3	230	---
Stecker US 115V 15A	0252-01-000011	15	blau	3	115	---

General characteristics:

- compact design, mounted on a baseplate, for direct installation
- solid resistance contactor combination
- premagnetisation time 0,7 seconds, can be changed if required
- can also be used as main contractor
- coil voltage AC 230V
- terminal connection up to 95A, above directly to contractor
- 10 cycles per hour
- optimized structure for vertical mounting on mounting plate

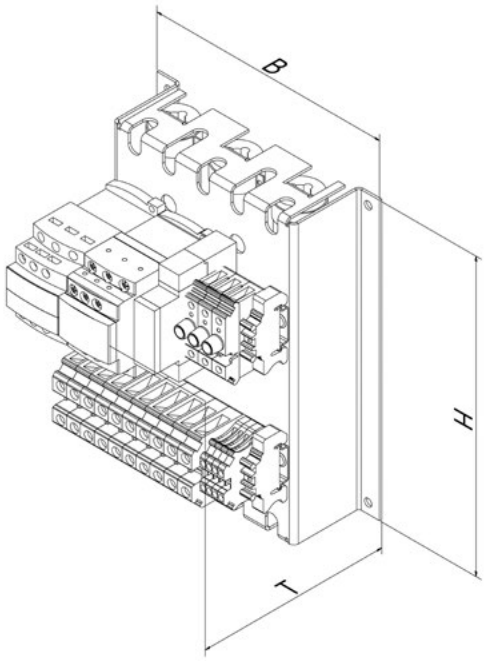

CE

Model	Art.-No.	Rated current [A]	bias [A]	Weight [kg]	Dimensions [mm]		
					B	H	T
BDESB 25	0253-01-000025	25	2,3	4,00	200	180	250
BDESB 32	0253-01-000032	32	2,3	4,00	200	180	250
BDESB 40	0253-01-000040	40	4	5,00	250	190	250
BDESB 50	0253-01-000050	50	4	5,00	250	190	250
BDESB 65	0253-01-000065	65	5	6,00	250	200	250
BDESB 80	0253-01-000080	80	10	7,00	250	200	250
BDESB 95	0253-01-000095	95	10	7,00	250	200	250
BDESB 115	0253-01-000115	115	10	7,00	300	240	345
BDESB 150	0253-01-000150	150	10	9,00	300	240	345
BDESB 225	0253-01-000225	225	10	10,0	300	250	345
BDESB 265	0253-01-000265	265	10	14,0	315	275	345
BDESB 330	0253-01-000330	330	20	16,0	473	285	345
BDESB 400	0253-01-000400	400	20	18,5	473	285	345
BDESB 500	0253-01-000500	500	20	21,5	473	295	345
BDESB 630	0253-01-000630	630	20	28,5	473	320	345

8 | OTHERS




	Single-phase		Three-phase	
GENERAL DATA	**PowerValue 11 RT**	**PowerValue 31/11 T**	**PowerScale**	**PowerWave 33**
UPS frame rated power	1 / 2 / 3 / 6 / 10 kVA	10 / 20 kVA	10 / 15 / 20 / 25 / 30 / 40 / 50 kVA	60 / 80 / 100 / 120 / 160 / 200 / 250 / 300 / 400 / 500 kW
UPS module rated power	–	–	–	–
UPS output rated PF	0.9	0.9	0.9	1.0
Max. no of parallel frames	Up to 2 units (model dependent)	Up to 4 units	Up to 20 units	Up to 10 units
Max no of parallel modules across frames	–	–	–	–
Max system power	20 kVA	80 kVA	1000 kVA	5000 kW
Wiring	1-ph + N + PE	1-ph or 3-ph + N + PE (selectable)	3ph + N + PE	3ph + N + PE
UPS type	**Rack or tower convertible**	**Standalone tower**	**Standalone tower**	**Standalone tower**
Topology	Online double conversion	Online double conversion	Online double conversion	Online double conversion
INPUT				
Nominal input voltage	208, 220, 230, 240 VAC	220 / 380, 230 / 400, 240 / 415 VAC	220 / 380, 230 / 400, 240 / 415 VAC	220 / 380, 230 / 400, 240 / 415 VAC
Voltage range	110 – 276 VAC	1-ph 110 – 276 VAC 3-ph 190 – 486 VAC	161/280 – 264/460 VAC	138/240 – 264/460 VAC
Frequency range	45 – 55 Hz for 50 Hz systems 54 – 66 Hz for 60 Hz systems	45 – 55 Hz for 50 Hz systems 54 – 66 Hz for 60 Hz systems	35 – 70 Hz	35 – 70 Hz
Current THD at 100% load	≤ 5%	≤ 5%	≤ 3%	≤ 4%
Power factor at 100% load	≥ 0.99	≥ 0.99	≥ 0.99	≥ 0.99
OUTPUT				
Rated output voltage (load dependent)	208, 220, 230, 240 VAC	220, 230, 240 VAC	220 / 380, 230 / 400, 240 / 415 VAC	220 / 380, 230 / 400, 240 / 415 VAC
Voltage THD (with linear load)	≤ 2%	≤ 2%	< 2%	< 2%
Rated frequency	50 or 60 Hz (selectable)	50 or 60 Hz (selectable)	50 or 60 Hz (selectable)	50 or 60 Hz (selectable)
EFFICIENCY				
Double conversion	Up to 93%	Up to 93%	Up to 95.5%	Up to 96%
Eco-mode	Up to 97%	Up to 97%	98%	99%
COMMUNICATIONS				
User Interface	LCD	LCD + LEDs	LCD + mimic diagram	LCD + mimic diagram (60 – 200 kW) System graphical display (250 – 500 kW)
Communication ports	USB, RS-232, SNMP slot, potential-free contacts (optional)	USB, RS-232, SNMP slot, potential-free contacts (optional)	USB (optional), RS-232, SNMP slot, potential-free contacts (optional)	USB, RS-232, SNMP slot, potential-free contacts
Software	monitoring and shutdown software available as option			




Three-phase			
DPA UPScale RI	**DPA UPScale ST**	**Conceptpower DPA**	**Conceptpower DPA 500**
10 / 20 / 40 / 80 kW	40 / 60 / 80 / 120 / 200 kW	50 / 150 / 250 kVA	500 kW
10 / 20 kW	10 / 20 kW	30 / 40 / 50 kVA	100 kW
1.0	1.0	0.8	1.0
1 subrack	Up to 4 frames	Up to 6 frames	Up to 6 frames
4 modules	20 modules	30 modules	30 modules
80 kW	400 kW	1500 kVA	3000 kW
3ph + N + PE	3ph + N + PE	3ph + N + PE	3ph + N + PE
Modular (DPA)	**Modular (DPA)**	**Modular (DPA)**	**Modular (DPA)**
Online double conversion	Online double conversion	Online double conversion	Online double conversion
220 / 380, 230 / 400, 240 / 415 VAC	220 / 380, 230 / 400, 240 / 415 VAC	220 / 380, 230 / 400, 240 / 415 VAC	220 / 380, 230 / 400, 240 / 415 VAC
150/260 – 264/460 VAC	150/260 – 264/460 VAC	161/280 – 264/460 VAC	161/280 – 264/460 VAC
35 – 70 Hz	35 – 70 Hz	35 – 70 Hz	35 – 70 Hz
< 3%	< 3%	< 3%	< 3.5%
≥ 0.99	≥ 0.99	≥ 0.99	≥ 0.99
220 / 380, 230 / 400, 240 / 415 VAC	220 / 380, 230 / 400, 240 / 415 VAC	220 / 380, 230 / 400, 240 / 415 VAC	220 / 380, 230 / 400, 240 / 415 VAC
< 1.5%	< 1.5%	< 1.5%	< 2%
50 or 60 Hz (selectable)	50 or 60 Hz (selectable)	50 or 60 Hz (selectable)	50 or 60 Hz (selectable)
Up to 96%	Up to 96%	Up to 96%	Up to 96%
98%	98%	99%	99%
Module level LCD + mimic diagram Remote system display (optional)	Module level LCD + mimic diagram System graphical display (optional)	Module level LCD + mimic diagram Remote system display (optional)	Module level LCD + mimic diagram System graphical display
USB, RS-232, SNMP slot, potential-free contacts	USB, RS-232, SNMP slot, potential-free contacts	USB, RS-232, SNMP slot, potential-free contacts	USB, RS-232, SNMP slot, potential-free contacts
monitoring and shutdown software available as option			

Bonding varnish, Trapezoidal coil, Air coil

Without long standing know-how in the production of bonding varnish, trapezoidal coils and air coils we manufacture according to your specific needs. We manufacture in a variety of applications such as transponders, sensors and charger techniques.

Possible designs:

- with or without bobbin coil former
- as air coil with bonding varnish wires
- wrapped of ferrite
- trapeze shape
- other customized geometries

Call us your wishes and we will work out an economically and technically mature solution.

Component and group assembly

Our assembly and component service offers you solutions , not only in relation of transformers , but also the completion of your products as an extended workbench. From assembling a relay coil to the assembly of complete electro- mechanical assemblies or maintenance of any component, here are almost no limits.

Feel free to contact us, we would be happy to assist you to solve your problems.

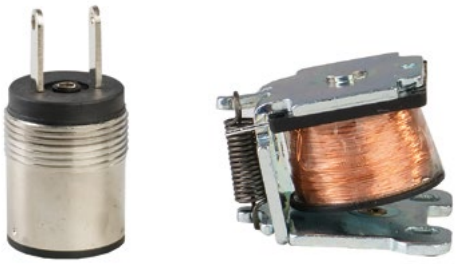

Casting of components and assemblies

Through our many years of experience in casting parts and assemblies , we are able to cast not only transformers but also sensitive electronics modules and sensor coils effectively and safely with a variety of installation conditions.

Protect your sensitive components from:

- external mechanical damage
- environmental influences
- product piracy etc.

Switchboards

Our services in this sector include among others planning , design and construction of complete switch gears and assemblies. We are looking forward to challenges with new creativity and passion to innovate. Our goal is to relieve the customers work and effort as much as possible.

Our strength in overview:

- development of investment concepts with customized guidelines
- designs with most modern software e.g. Eplan P8 zbd Autodesk Inventor
- construction of the complete system in accordance to the relevant standards
- commissioning and training at the customers place
- maintenance service

Toroidal transformers

Toroidal transformers come in numerous applications , primarily anywhere where low weight and small size are required. Depending on the design of the toroidal transformer , the transformer can have up to one third of the volume of a conventional transformer. Unfortunately, there are also disadvantages such as high inrush currents or poor efficiency.
We are happy to advise you on this relevant.

Our product range is conformed at the following technical key data:

- Power: 5 – 10000 VA
- Frequency: 10 – 2000 Hz
- Voltage: up to 1000 VAC

Print transformers and coils

Also the manufacturing of PCB transformers, chokes and audio transformers are part of our product range.

- special designs in conjunction with complete printed circuit boards
- several versions with cut tape or ferrite core possible
- open or sheded version
- audio transformers, voltage and current transformers on customer specifications

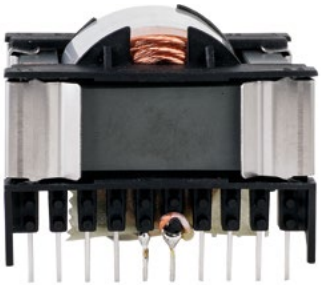

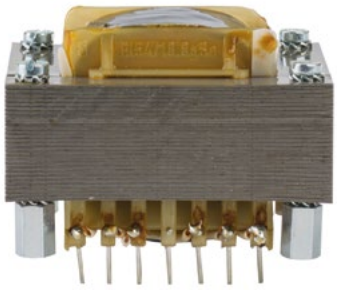

General Conditions for the Supply of Products and Services of the Electrical and Electronics Industry („Grüne Lieferbedingungen" – GL)

Article I: General Provisions

1. Legal relations between Supplier and Purchaser in connection with supplies and/or services of the Supplier (hereinafter referred to as „Supplies") shall be solely governed by the present GL. The Purchaser's general terms and conditions shall apply only if expressly accepted by the Supplier in writing. The scope of delivery shall be determined by the congruent mutual written declarations.
2. The Supplier herewith reserves any industrial property rights and/or copyrights pertaining to its cost estimates, drawings and other documents (hereinafter referred to as „Documents"). The Documents shall not be made accessible to third parties without the Supplier's prior consent and shall, upon request, be returned without undue delay to the Supplier if the contract is not awarded to the Supplier. Sentences 1 and 2 shall apply mutatis mutandis to the Purchaser's Documents; these may, however, be made accessible to those third parties to whom the Supplier has rightfully subcontracted Supplies.
3. The Purchaser has the non-exclusive right to use standard software and firmware, provided that it remains unchanged, is used within the agreed performance parameters, and on the agreed equipment. Without express agreement the Purchaser may make one back-up copy of standard software.
4. Partial deliveries are allowed, unless they are unreasonable to accept for the Purchaser.
5. The term „claim for damages" used in the present GL also includes claims for indemnification for useless expenditure.

Article II: Prices, Terms of Payment, and Set-Off

1. Prices are ex works and excluding packaging; value added tax shall be added at the then applicable rate.
2. If the Supplier is also responsible for assembly or erection and unless otherwise agreed, the Purchaser shall pay the agreed remuneration and any incidental costs required, e. g. for traveling and transport as well as allowances.
3. Payments shall be made free Supplier's paying office.
4. The Purchaser may set off only those claims which are undisputed or non- appealable.

Article III: Retention of Title

1. The items pertaining to the Supplies („Retained Goods") shall remain the Supplier's property until each and every claim the Supplier has against the Purchaser on account of the business relationship has been fulfilled. If the combined value of the Supplier's security interests exceeds the value of all secured claims by more than 20 %, the Supplier shall release a corresponding part of the security interest if so requested by the Purchaser; the Supplier shall be entitled to choose which security interest it wishes to release.
2. For the duration of the retention of title, the Purchaser may not pledge the Retained Goods or use them as security, and resale shall be possible only for resellers in the ordinary course of their business and only on condition that the reseller receives payment from its customer or makes the transfer of property to the customer dependent upon the customer fulfilling its obligation to effect payment.
3. Should Purchaser resell Retained Goods, it assigns to the Supplier, already today, all claims it will have against its customers out of the resale, including any collateral rights and all balance claims, as security, without any subsequent declarations to this effect being necessary. If the Retained Goods are sold on together with other items and no individual price has been agreed with respect to the Retained Goods, Purchaser shall assign to the Supplier such fraction of the total price claim as is attributable to the price of the Retained Goods invoiced by Supplier.
4. a) Purchaser may process, amalgamate or combine Retained Goods with other items. Processing is made for Supplier. Purchaser shall store the new item thus created for Supplier, exercising the due care of a diligent business person. The new items are considered as Retained Goods.
   b) Already today, Supplier and Purchaser agree that if Retained Goods are combined or amalgamated with other items that are not the property of Supplier, Supplier shall acquire co-ownership in the new item in proportion of the value of the Retained Goods combined or amalgamated to the other items at the time of combination or amalgamation. In this respect, the new items are considered as Retained Goods.
   c) The provisions on the assignment of claims according to No. 3 above shall also apply to the new item. The assignment, however, shall only apply to the amount corresponding to the value invoiced by Supplier for the Retained Goods that have been processed, combined or amalgamated.
   d) Where Purchaser combines Retained Goods with real estate or movable goods, it shall, without any further declaration being necessary to this effect, also assign to Supplier as security its claim to consideration for the combination, including all collateral

rights for the pro- rata amount of the value the combined Retained Goods have on the other combined items at the time of the combination.

5. Until further notice, Purchaser may collect assigned claims relating to the resale. Supplier is entitled to withdraw Purchaser's permission to collect funds for good reason, including, but not limited to delayed payment, suspension of payments, start of insolvency proceedings, protest or justified indications for overindebtedness or pending insolvency of Purchaser. In addition, Supplier may, upon expiry of an adequate period of notice disclose the assignment, realize the claims assigned and demand that Purchaser informs its customer of the assignment..
6. The Purchaser shall inform the Supplier forthwith of any seizure or other act of intervention by third parties. If a reasonable interest can be proven, Purchaser shall, without undue delay, provide Supplier with the information and/or Documents necessary to assert the claims it has against its customers.
7. Where the Purchaser fails to fulfill its duties, fails to make payment due, or otherwise violates its obligations the Supplier shall be entitled to rescind the contract and take back the Retained Goods in the case of continued failure following expiry of a reasonable remedy period set by the Supplier; the statutory provisions providing that a remedy period is not needed shall be unaffected. The Purchaser shall be obliged to return the Retained Goods. The fact that the Supplier takes back Retained Goods and/or exercises the retention of title, or has the Retained Goods seized, shall not be construed to constitute a rescission of the contract, unless the Supplier so expressly declares.

Article IV: Time for Supplies; Delay

1. Times set for Supplies shall only be binding if all Documents to be furnished by the Purchaser, necessary permits and approvals, especially concerning plans, are received in time and if agreed terms of payment and other obligations of the Purchaser are fulfilled. If these conditions are not fulfilled in time, times set shall be extended reasonably; this shall not apply if the Supplier is responsible for the delay.
2. If non-observance of the times set is due to:
   a) force majeure, such as mobilization, war, terror attacks, rebellion or similar events (e. g. strike or lockout);
   b) virus attacks or other attacks on the Supplier's IT systems occurring despite protective measures were in place that complied with the principles of proper care;
   c) hindrances attributable to German, US or otherwise applicable national, EU or international rules of foreign trade law or to other circumstances for which Supplier is not responsible; or
   d) the fact that Supplier does not receive its own supplies in due time or in due form such times shall be extended accordingly.
3. If the Supplier is responsible for the delay (hereinafter referred to as „Delay") and the Purchaser has demonstrably suffered a loss therefrom, the Purchaser may claim a compensation as liquidated damages of 0.5 % for every completed week of Delay, but in no case more than a total of 5 % of the price of that part of the Supplies which due to the Delay could not be put to the intended use.
4. Purchaser's claims for damages due to delayed Supplies as well as claims for damages in lieu of performance exceeding the limits specified in No. 3 above are excluded in all cases of delayed Supplies, even upon expiry of a time set to the Supplier to effect the Supplies. This shall not apply in cases of liability based on intent, gross negligence, or due to loss of life, bodily injury or damage to health. Rescission of the contract by the Purchaser based on statute is limited to cases where the Supplier is responsible for the delay. The above provisions do not imply a change in the burden of proof to the detriment of the Purchaser.
5. At the Supplier's request, the Purchaser shall declare within a reasonable period of time whether it, due to the delayed Supplies, rescinds the contract or insists on the delivery of the Supplies.
6. If dispatch or delivery, due to Purchaser's request, is delayed by more than one month after notification of the readiness for dispatch was given, the Purchaser may be charged, for every additional month commenced, storage costs of 0.5 % of the price of the items of the Supplies, but in no case more than a total of 5 %. The parties to the contract may prove that higher or, as the case may be, lower storage costs have been incurred.

Article V: Passing of Risk

1. Even where delivery has been agreed freight free, the risk shall pass to the Purchaser as follows:
   a) if the delivery does not include assembly or erection, at the time when it is shipped or picked up by the carrier. Upon the Purchaser's request, the Supplier shall insure the delivery against the usual risks of transport at the Purchaser's expense;
   b) if the delivery includes assembly or erection, at the day of taking over in the Purchaser's own works or, if so agreed, after a successful trial run.
2. The risk shall pass to the Purchaser if dispatch, delivery, the start or performance of assembly or erection, the taking over in the Purchaser's own works, or the trial run is delayed for reasons for which the Purchaser is responsible or if the Purchaser has otherwise failed to accept the Supplies.

Article VI: Assembly and Erection

Unless otherwise agreed in written form, assembly and erection shall be subject to the following provisions:

1. Purchaser shall provide at its own expense and in due time:
   a) all earth and construction work and other ancillary work outside the Supplier's scope, including the necessary skilled and unskilled labor, construction materials and tools;
   b) the equipment and materials necessary for assembly and commissioning such as scaffolds, lifting equipment and other devices as well as fuels and lubricants;
   c) energy and water at the point of use including connections, heating and lighting;
   d) suitable dry and lockable rooms of sufficient size adjacent to the site for the storage of machine parts, apparatus, materials, tools, etc. and adequate working and recreation rooms for the erection personnel, including sanitary facilities as are appropriate in the specific circumstances; furthermore, the Purchaser shall take all measures it would take for the protection of its own possessions to protect the possessions of the Supplier and of the erection personnel at the site;
   e) protective clothing and protective devices needed due to particular conditions prevailing on the specific site.
2. Before the erection work starts, the Purchaser shall unsolicitedly make available any information required concerning the location of concealed electric power, gas and water lines or of similar installations as well as the necessary structural data.
3. Prior to assembly or erection, the materials and equipment necessary for the work to start must be available on the site of assembly or erection and any preparatory work must have advanced to such a degree that assembly or erection can be started as agreed and carried out without interruption. Access roads and the site of assembly or erection must be level and clear.
4. If assembly, erection or commissioning is delayed due to circumstances for which the Supplier is not responsible, the Purchaser shall bear the reasonable costs incurred for idle times and any additional traveling expenditure of the Supplier or the erection personnel.
5. The Purchaser shall attest to the hours worked by the erection personnel towards the Supplier at weekly intervals and the Purchaser shall immediately confirm in written form if assembly, erection or commissioning has been completed.
6. If, after completion, the Supplier demands acceptance of the Supplies, the Purchaser shall comply therewith within a period of two weeks. The same consequences as upon acceptance arise if and when the Purchaser lets the twoweek period expire or the Supplies are put to use after completion of agreed test phases, if any.

Article VII: Receiving Supplies

The Purchaser shall not refuse to receive Supplies due to minor defects.

Article VIII: Defects as to Quality

The Supplier shall be liable for defects as to quality ("Sachmängel", hereinafter referred to as "Defects",) as follows:

1. Defective parts or defective services shall be, at the Supplier's discretion, repaired, replaced or provided again free of charge, provided that the reason for the Defect had already existed at the time when the risk passed.
2. Claims for repair or replacement are subject to a statute of limitations of 12 months calculated from the start of the statutory statute of limitations; the same shall apply mutatis mutandis in the case of rescission and reduction. This shall not apply where longer periods are prescribed by law according to Sec. 438 para. 1 No. 2 (buildings and things used for a building), Sec. 479 para. 1 (right of recourse), and Sec. 634a para. 1 No. 2 (defects of a building) German Civil Code ("Bürgerliches Gesetzbuch"), in the case of intent, fraudulent concealment of the Defect or non-compliance with guaranteed characteristics ("Beschaffenheitsgarantie"). The legal provisions regarding suspension of the statute of limitations ("Ablaufhemmung", "Hemmung") and recommencement of limitation periods shall be unaffected.
3. Notifications of Defect by the Purchaser shall be given in written form without undue delay.
4. In the case of notification of a Defect, the Purchaser may withhold payments to an amount that is in a reasonable proportion to the Defect. The Purchaser, however, may withhold payments only if the subject-matter of the notification of the Defect involved is justified and incontestable. The Purchaser has no right to withhold payments to the extent that its claim of a Defect is time-barred. Unjustified notifications of Defect shall entitle the Supplier to demand reimbursement of its expenses by the Purchaser.
5. The Supplier shall be given the opportunity to repair or to replace the defective good ("Nacherfüllung") within a reasonable period of time.
6. If repair or replacement is unsuccessful, the Purchaser is entitled to rescind the contract or reduce the remuneration; any claims for damages the Purchaser may have according to No. 10 shall be unaffected.
7. There shall be no claims based on Defect in cases of insignificant deviations from the agreed quality, of only minor impairment of usability, of natural wear and tear, or damage arising after the passing of risk from faulty or negligent handling, excessive strain, unsuitable equipment, defective civil works, inappropriate foundation soil, or claims based on particular external influences not assumed under the contract, or from non-reproducible software errors. Claims based on defects attributable to improper modifi-

cations or repair work carried out by the Purchaser or third parties and the consequences thereof are likewise excluded.

8. The Purchaser shall have no claim with respect to expenses incurred in the course of supplementary performance, including costs of travel, transport, labor, and material, to the extent that expenses are increased because the subjectmatter of the Supplies has subsequently been brought to another location than the Purchaser's branch office, unless doing so complies with the normal use of the Supplies.
9. The Purchaser's right of recourse against the Supplier pursuant to Sec. 478 BGB is limited to cases where the Purchaser has not concluded an agreement with its customers exceeding the scope of the statutory provisions governing claims based on Defects. Moreover, No. 8 above shall apply mutatis mutandis to the scope of the right of recourse the Purchaser has against the Supplier pursuant to Sec. 478 para. 2 BGB.
10. The Purchaser shall have no claim for damages based on Defects. This shall not apply to the extent that a Defect has been fraudulently concealed, the guaranteed characteristics are not complied with, in the case of loss of life, bodily injury or damage to health, and/or intentionally or grossly negligent breach of contract on the part of the Supplier. The above provisions do not imply a change in the burden of proof to the detriment of the Purchaser. Any other or additional claims of the Purchaser exceeding the claims provided for in this Article VIII, based on a Defect, are excluded.

Article IX: Industrial Property Rights and Copyrights; Defects in Title

1. Unless otherwise agreed, the Supplier shall provide the Supplies free from third parties' industrial property rights and copyrights (hereinafter referred to as "IPR") with respect to the country of the place of delivery only. If a third party asserts a justified claim against the Purchaser based on an infringement of an IPR by the Supplies made by the Supplier and used in conformity with the contract, the Supplier shall be liable to the Purchaser within the time period stipulated in Article VIII No. 2 as follows:
   a) The Supplier shall choose whether to acquire, at its own expense, the right to use the IPR with respect to the Supplies concerned or whether to modify the Supplies such that they no longer infringe the IPR or replace them. If this would be impossible for the Supplier under reasonable conditions, the Purchaser may rescind the contract or reduce the remuneration pursuant to the applicable statutory provisions;
   b) The Supplier's liability to pay damages is governed by Article XII;
   c) The above obligations of the Supplier shall apply only if the Purchaser (i) immediately notifies the Supplier of any such claim asserted by the third party in written form, (ii) does not concede the existence of an infringement and (iii) leaves any protective measures and settlement negotiations to the Supplier's discretion. If the Purchaser stops using the Supplies in order to reduce the damage or for third party that no acknowledgement of the alleged infringement may be inferred from the fact that the use has been discontinued.
2. Claims of the Purchaser shall be excluded if it is responsible for the infringement of an IPR.
3. Claims of the Purchaser are also excluded if the infringement of the IPR is caused by specifications made by the Purchaser, by a type of use not foreseeable by the Supplier or by the Supplies being modified by the Purchaser or being used together with products not provided by the Supplier.
4. In addition, with respect to claims by the Purchaser pursuant to No. 1 a) above, Article VIII Nos. 4, 5, and 9 shall apply mutatis mutandis in the event of an infringement of an IPR.
5. Where other defects in title occur, Article VIII shall apply mutatis mutandis.
6. Any other claims of the Purchaser against the Supplier or its agents or any such claims exceeding the claims provided for in this Article IX, based on a defect in title, are excluded.

Article X: Conditional Performance

1. The performance of this contract is conditional upon that no hindrances attributable to German, US or otherwise applicable national, EU or international rules of foreign trade law or any embargos or other sanctions exist.
2. The Purchaser shall provide any information and Documents required for export, transport and import purposes.

Article XI: Impossibility of Performance; Adaptation of Contract

1. To the extent that delivery is impossible, the Purchaser is entitled to claim damages, unless the Supplier is not responsible for the impossibility. The Purchaser's claim for damages is, however, limited to an amount of 10 % of the value of the part of the Supplies which, owing to the impossibility, cannot be put to the intended use. This limitation shall not apply in the case of liability based on intent, gross negligence or loss of life, bodily injury or damage to health; this does not imply a change in the burden of proof to the detriment of the Purchaser. The Purchaser's right to rescind the contract shall be unaffected.
2. Where events within the meaning of Article IV No. 2 (a) to (c) substantially change the economic importance or the contents of the Supplies or considerably affect the Supplier's business, the contract shall be adapted taking into account the principles of reaso-

nableness and good faith. To the extent this is not justifiable for economic reasons, the Supplier shall have the right to rescind the contract. The same applies if required export permits are not granted or cannot be used. If the Supplier intends to exercise its right to rescind the contract, it shall notify the Purchaser thereof without undue delay after having realized the repercussions of the event; this shall also apply even where an extension of the delivery period has previously been agreed with the

Article XII: Other Claims for Damages

1. Unless otherwise provided for in the present GL, the Purchaser has no claim for damages based on whatever legal reason, including infringement of duties arising in connection with the contract or tort.
2. This does not apply if liability is based on:
   a) the German Product Liability Act ("Produkthaftungsgesetz");
   b) intent;
   c) gross negligence on the part of the owners, legal representatives or executives;
   d) fraud;
   e) failure to comply with a guarantee granted;
   f) negligent injury to life, limb or health; or
   g) negligent breach of a fundamental condition of contract ("wesentliche Vertragspflichten").

However, claims for damages arising from a breach of a fundamental condition of contract shall be limited to the foreseeable damage which is intrinsic to the contract, provided that no other of the above case applies.

3. The above provision does not imply a change in the burden of proof to the detriment of the Purchaser.

Artikel XIII: Venue and Applicable law

1. If the Purchaser is a businessman, sole venue for all disputes arising directly or indirectly out of the contract shall be the Supplier's place of business. However, the Supplier may also bring an action at the Purchaser's place of business.
2. This contract and its interpretation shall be governed by German law, to the exclusion of the United Nations Convention on contracts for the International Sale of Goods (CISG).

Article XIV: Severability Clause

The legal invalidity of one or more provisions of this Agreement in no way affects the validity of the remaining provisions. This shall not apply if it would be unreasonably onerous for one of the parties to be obligated to continue the contract.

Supplementary Clause: Extended Retention of Title

The following Basic and Extended Retention of Title shall be agreed:

1. The items pertaining to the Supplies ("Retained Goods") shall remain the Supplier's property until each and every claim the Supplier has against the Purchaser on account of the business relationship has been fulfilled. If the combined value of the Supplier's security interests exceeds the value of all secured claims by more than 20 %, the Supplier shall release a corresponding part of the security interest if so requested by the Purchaser; the Supplier shall be entitled to choose which security interest it wishes to release.
2. For the duration of the retention of title, the Purchaser may not pledge the Retained Goods or use them as security, and resale shall be possible only for resellers in the ordinary course of their business and only on condition that the reseller receives payment from its customer or makes the transfer of property to the customer dependent upon the customer fulfilling its obligation to effect payment.
3. Should Purchaser resell Retained Goods, it assigns to the Supplier, already today, all claims it will have against its customers out of the resale, including any collateral rights and all balance claims, as security, without any subsequent declarations to this effect being necessary. If the Retained Goods are sold on together with other items and no individual price has been agreed with respect to the Retained Goods, Purchaser shall assign to the Supplier such fraction of the total price claim as is attributable to the price of the Retained Goods invoiced by Supplier.
4. a) Purchaser may process, amalgamate or combine Retained Goods with other items. Processing is made for Supplier. Purchaser shall store the new item thus created for Supplier, exercising the due care of a diligent business person. The new items are considered as Retained Goods.
   b) Already today, Supplier and Purchaser agree that if Retained Goods are combined or amalgamated with other items that are not the property of Supplier, Supplier shall acquire co-ownership in the new item in proportion of the value of the Retained Goods combined or amalgamated to the other items at the time of combination or amalgamation. In this respect, the new items are considered as Retained Goods.
   c) The provisions on the assignment of claims according to No. 3 above shall also apply to the new item. The assignment, however, shall only apply to the amount corresponding to the value invoiced by Supplier for the Retained Goods that have been processed, combined or amalgamated.
   d) Where Purchaser combines Retained Goods with real estate or movable goods, it shall, without any further declaration being necessary to this effect, also assign to Supplier as security its claim to consideration for the combination, including all collateral rights for the pro-rat amount of the value the combined Retained Goods have on the other combined items at the time of the combination.
5. Until further notice, Purchaser may collect assigned claims relating to the resale. Supplier is entitled to withdraw Purchaser's permission to collect funds for good reason, including, but not limited to delayed payment, suspension of payments, start of insolvency proceedings, protest or justified indications for overindebtedness or pending insolvency of Purchaser. In addition, Supplier may, upon expiry of an adequate period of notice disclose the assignment, realize the claims assigned and demand that Purchaser informs its customer of the assignment.
6. The Purchaser shall inform the Supplier forthwith of any seizure or other act of intervention by third parties. If a reasonable interest can be proven, Purchaser shall, without undue delay, provide Supplier with the information and/or Documents necessary to assert the claims it has against its customers.
7. Where the Purchaser fails to fulfill its duties, fails to make payment due, or otherwise violates its obligations the Supplier shall be entitled to rescind the contract and take back the Retained Goods in the case of continued failure following expiry of a reasonable remedy period set by the Supplier; the statutory provisions providing that a remedy period is not needed shall be unaffected. The Purchaser shall be obliged to return the Retained Goods. The fact that the Supplier takes back Retained Goods and/or exercises the retention of title, or has the Retained Goods seized, shall not be construed to constitute a rescission of the contract, unless the Supplier so expressly declares.

Notes

Notes

BRE BREIMER-ROTH TRANSFORMATOREN

Breimer-Roth
Transformatorenwerk GmbH
Ostring 11–13 · 64711 Erbach

Fon +49 (0)60 62 - 9 42 50
Fax +49 (0)60 62 - 20 35
info@bre-trafo.com

www.bre-trafo.com

Revision 07/2016